

Waipapa Taumata Rau Student Centre and Library

Geotechnical Basement Retaining Design Report

Prepared for: The University of Auckland

Prepared by: Tonkin & Taylor Ltd

Job Number: 1103046-RPT-GEO-105 v2.1

Date: November 2026

Document control and review

Title: Report	Waipapa Taumata Rau Student Centre and Library - Geotechnical Basement Retaining Design				
Reference:	1103046-RPT-GEO-105				
Date	**Version**	**Description**	**Prepared by**	**Reviewed by**	**Authorised by**
29/10/2026	1.0	Draft	T. Lam	M. Kent	C. Freer
2/11/2026	2.1	For FTAA Substantive Application	T. Lam	M. Kent	C. Freer

Table of contents

1 Introduction 1
1.1 General 1
1.2 Site description and proposed development 1
1.3 Retention scheme 2
2 Design requirements 3
2.1 Groundwater 3
2.2 Stability 3
2.3 Displacement 3
3 Design assumptions 3
3.1 Methodology 3
3.2 Ground model and typical sections 3
3.3 Design soil parameters 5
3.4 Groundwater profile 5
3.5 Surcharges 5
3.6 Seismic loading 6
3.7 Structural properties 6
3.7.1 Reinforced concrete piles 6
3.8 Props and anchors 6
4 Construction sequence 7
5 Analysis results 10
6 Further work and construction considerations 12
7 Applicability 13

Appendix A WALLAP outputs

1 Introduction

1.1 General

The University of Auckland Property Services (UoA) has engaged Tonkin & Taylor Ltd (T+T) to provide geotechnical consultancy services for the proposed basement retaining wall design of the new UoA Waipapa Taumata Rau, Student Centre and Library on the corner of Princes Street and Alfred Street, Auckland Central (the Site).

This report has been prepared to summarise the geotechnical design of the perimeter temporary retaining walls required to support the basement excavation and construction associated with the proposed development. This report should be read in conjunction with the T+T Geotechnical Interpretative Report (GIR)[1], which details the site-specific investigations undertaken for the development, and the interpretation of the geotechnical model for the site.

1.2 Site description and proposed development

The proposed development involves the demolition of the existing Student Union Building Complex (B311 and B312) and construction of a new Student Centre and Library within the northern portion of the wider property at 30–38 Princes Street, Auckland Central.

The proposed building comprises eight levels including two basement levels and six above ground levels with rooftop plant in addition. Architectural layout plans[2] and preliminary retention sections[3] for the basement development have been provided by Warren and Mahoney ('WAM') Architects and Beca. The site location is illustrated in Figure 1.1.



Figure 1.1: Development plan with markup of approximate site area (Base plan source: WAM).

[1] T+T, October 2026. UoA Waipapa Taumata Rau, Library and Student Hub – Geotechnical Interpretive Report. Ref: 1103046-RPT-GEO-104 v1.
[2] Warren and Mahoney. 16 October 2026. Waipapa Taumata Rau, The University of Auckland Student Centre and Library. 100% FTAA Substantive Application, Appendix A: Architectural Drawings.
[3] Beca. September 2026. Student Centre and Library. Level B1 Foundation Plan. Ref: 5013381. Rev. B.

1.3 Retention scheme

The proposed two-level basement comprises of an upper partial basement level (Level LG) and a lower basement level (Level B), with the proposed finished floor levels of 40.7 mRL and 36.1 mRL respectively.

Temporary retaining systems and cut batters will be required to facilitate the excavation and construction of the proposed basement levels. During construction, an additional 1 m of bulk excavation below the proposed Level B finished floor level (35.1 mRL) has been assumed for the temporary retaining system design.

The western and south-western basement walls are located adjacent to Princes Street, where the existing ground elevation reaches approximately 45.6 mRL. The northern basement wall is located adjacent to Alfred Street, where the ground generally slopes down towards the east, with elevations ranging from approximately 45.5 mRL to 42.6 mRL. The eastern basement wall is adjacent to the neighbouring Auckland University Student Association Building (AUSA House) and the Kate Edger Information Commons Building (B315), the existing ground elevation is approximately 42.6 mRL.

The basement wall locations are illustrated in Figure 1.2. The wall heights are summarised in Table 1.1. It is currently intended that the portion of the excavation adjacent to the Hiwa pool hall will utilise the existing pool hall wall which will require detailed staging to remove existing ground anchors. As the southern basement wall options may be affected by this work the related design will be assessed at that stage.

The temporary retaining walls are anticipated to comprise reinforced concrete soldier piles with shotcrete infill. Vertical strip drains between the piles and between the shotcrete and excavation face will intercept groundwater seepage. Temporary support will be required; internal inclined props and external ground anchor options have been assessed. In the permanent case the wall will be supported by the internal building structure.

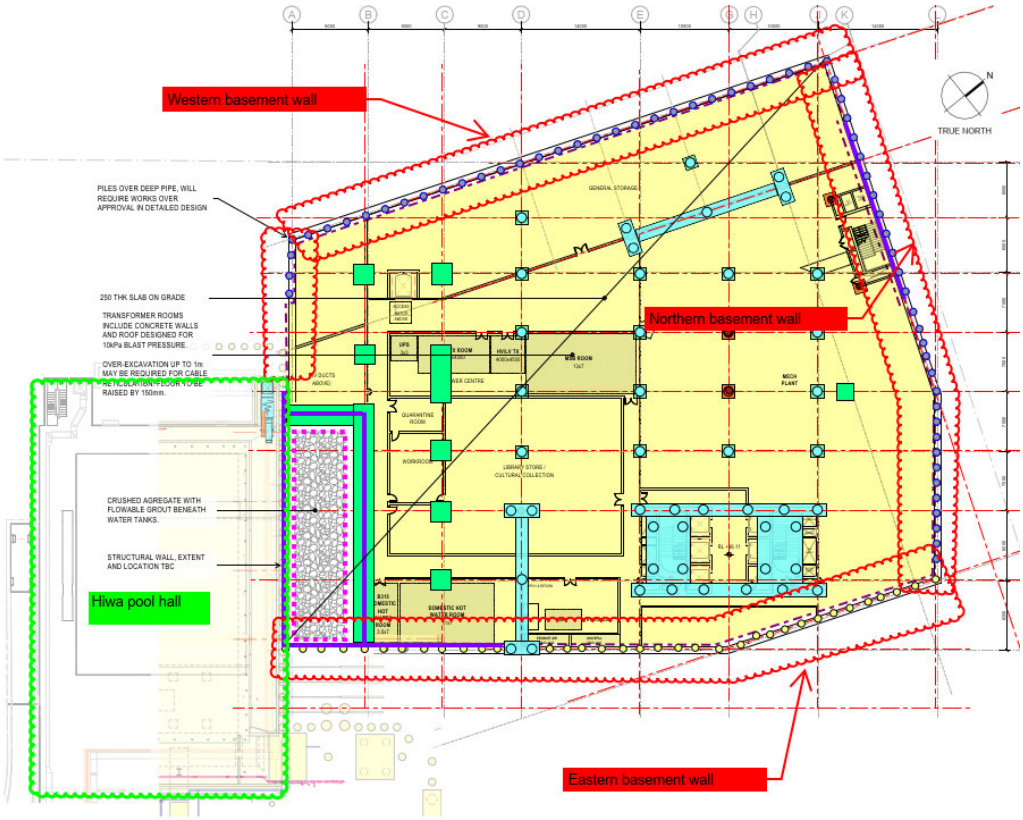

Figure 1.2: Basement wall locations.

Table 1.1: Summary of temporary retention schemes

Basement Wall	Retention Scheme	Preliminary design Basement FFL (mRL)	Maximum retained height (m)	
			Construction	Post-Construction
Southern	To be assessed at later design stages			
Western	Reinforced concrete soldier piles with temporary inclined internal props or ground anchors	36.1	10.5	9.5
Northern		36.1	10.4	9.4
Eastern		36.1	7.5	6.5

2 Design requirements

2.1 Groundwater

The design assumes the wall will be fully drained in both the temporary and permanent case. Drainage systems are expected to comprise vertical strip drains pinned to the excavation face between each pile and discharging to a drainage system that will remove the water from the basement area.

2.2 Stability

Minimum Factors of Safety (FoS) against overturning of the walls have been adopted as follows using the strength factor method:

- Temporary stability; FoS ≥ 1.2.
- Permanent stability, FoS > 1.5.

2.3 Displacement

The temporary retention was designed to the following target maximum wall deflections:

- Wall deflection ≤ 25 mm for the site road boundaries.
- Wall deflection ≤ 15 mm for the wall adjacent to existing UoA buildings at a depth equal to the set-back distance between the wall alignment and the buildings.

3 Design assumptions

3.1 Methodology

The temporary retention design was assessed using a 2D retaining wall design program, WALLAP[4], to determine the embedment lengths, prop requirements, bending moments, shear force and construction staging.

3.2 Ground model and typical sections

The site geotechnical investigation data and interpretation are set out in the GIR[1]. The site is inferred to be underlain by (in order of sequence) surficial fill, Auckland Volcanic Field (AVF), and East Coast Bays Formation soil and rock.

[4] Geosolve (2013). Computer program. *WALLAP Anchored and Cantilevered Retaining Wall Analysis Program*. Version 6.05.

The recent geotechnical information was used to develop three key general ground models. These three sections are representative of the worst-case for the western, northern and eastern basement wall, for preliminary retention design purposes. The sections relate to the buildings as follows:

- Section 1 (S1): Western Basement Wall.
- Section 2 (S2): Northern Basement Wall.
- Section 3 (S3): Eastern Basement Wall.

The locations of the representative sections are shown in Figure 3.1 and the ground models are presented in Table 3.1.

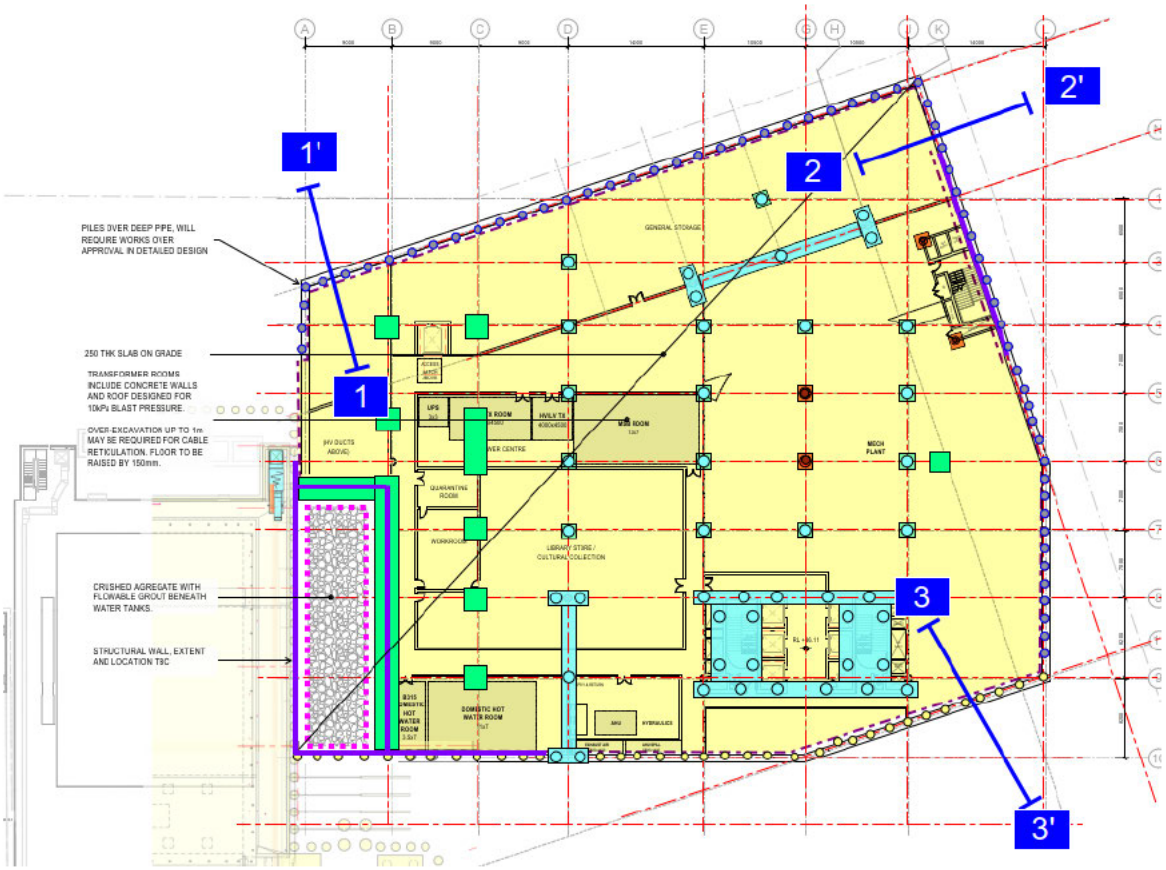

Figure 3.1: Location of representative sections used for preliminary retention design analysis.

Table 3.1: Summary of adopted ground models for preliminary retention design

Geological unit	Top of geological unit elevation (mRL)		
	Section 1 (West)	Section 2 (North)	Section 3 (East)
Surficial Fill	45.5 (existing ground surface)	45.2 (existing ground surface)	42.6 (existing ground surface)
AVF	44.5	44.3	42.4
Residual ECBF soils	41.5	39.2	39.0
HW – MW ECBF rock	37.0	35.4	34.5
SW – UW ECBF rock (SPT N >50)	32.0	34.7	30.6

3.3 Design soil parameters

In accordance with the T+T GIR[1], the design soil parameters presented in Table 3.2 have been adopted for the preliminary design of the basement retaining walls. These parameters have been assessed based on the results of the field investigations from recent and historic investigations on the site and our experience in the area with similar materials.

Table 3.2: Geotechnical Design Parameters

Geological Unit	Bulk density (kN/m^3)	Effective cohesion. c' (kPa)	Friction Angle ϕ' (°)	Wall Friction Coefficient δ/ϕ'	Young's elastic modulus (MPa)	Poisson's ratio, v
Surficial fill	17	2	28	0.67 (active) 0.50 (passive)	10	0.3
AVF	18	5	28		20	0.3
Residual ECBF soils	18	5	30		20	0.3
HW - MW ECBF	19	10	35		50	0.25
SW – UW ECBF rock (SPT N>50)	20	50	40		150	0.25

3.4 Groundwater profile

Pre-development groundwater pressures are discussed in the T+T Groundwater and Settlement Effects Report (T+T ref: 1103046-RPT-GEO-106), and summarised in Table 3.3. During excavation groundwater drawdown will occur, the rate of drawdown has not been specifically assessed. In the temporary excavation case, long-term effective stress soil parameters and pre-development groundwater pressures are adopted. This provides a conservative envelope of temporary structural demands and wall deformations.

For the permanent case, a maximum seepage pressure of 1/3 wall height is assumed.

Table 3.3: Adopted groundwater level for temporary works

Case	Section 1 (West)	Section 2 (North)	Section 3 (East)
Typical pre-development GWL on the active side of the wall	43.0 mRL	41.7 mRL	41.0 mRL
Maximum drawdown level (bulk excavation or permanent drainage) on the passive side of the wall	35.1 mRL		
Perched groundwater pressure limit	45 kPa		

3.5 Surcharges

The surcharges which have been applied at the top of walls are as follows:

- A pedestrian loading of 5 kPa above the walls extending 7 m and 9 m beyond the Northern (Alfred Street) and Western (Princess Street) boundaries respectively and between the wall and the AUSA House east of the proposed basement.
- A traffic loading of 12 kPa for Alfred Street and Princess Street traffic lanes .
- AUSA House is a 2-storey building, its foundations are unknown but likely to be supported on shallow footings. A 20 kPa surcharge applied 7.5 m behind the back of the wall.

No allowance has been made for construction loading (e.g. mobile cranes, gantries, material stockpiles) above the wall.

3.6 Seismic loading

This preliminary assessment has excluded the seismic load case. The purpose of this study has been to consider effects on surrounding structures under the static load case for resource consent purposes. Seismic loads will be assessed during detailed design.

3.7 Structural properties

The structural properties and assumptions presented below should be reviewed and confirmed by the project structural engineer.

3.7.1 Reinforced concrete piles

The following structural properties have been assumed in the retention analyses:

- Basement wall is modelled in WALLAP as fully embedded walls.
  - Retaining piles with Modulus of Elasticity (E): 29 GPa.
  - A cracking factor for temporary conditions has been applied. A summary of the derived composite pile stiffnesses adopted in the analysis is presented in Table 3.4. Composite stiffness values will be included in later design phases.
- Retaining piles will extend a minimum 2 m into the underlying ECBF for toe fixity

Additional embedment may be required to accommodate structural loading, which shall be assessed by the structural engineer.

Table 3.4: Summary of wall stiffness

Wall	Pile type	Pile Spacing	Composite Stiffness, *EI/m run* [kNm^2/m]
			Temporary case 75% EI_{gross}
S1 and S2	900 dia. reinforced concrete (RC) piles	2400 mm c/c	291,880
S3	750 dia. reinforced concrete (RC) piles	1800 mm c/c	187,670

3.8 Props and anchors

Temporary props/anchors are required to support the proposed basements at the site. A summary of the propping details and properties is presented in Table 3.5.

A capping beam is recommended for all basement walls. Construction of the capping beam prior to excavation will be required to mitigate over-rotation of singular piles founded in loose/soft soil.

An equivalent axial stiffness/m (EA/L/m run) is presented for all props in Table 3.5.

The following Modulus of Elasticity (*E*) has been adopted:

- Temporary steel props or anchors; 200 GPa.
- Permanent floor slabs; 30 GPa and 150 mm nominal thickness.

Table 3.5: Summary of prop details

Retention Scheme		Elevation (mRL)	Effective length, L' (m)	Section Area, A (m^2/prop)	Axial stiffness EA/L'/m run (kN/m/m run)(1)
Option 1	S1 & S2: 310UC158 @ 4.8 m c/c spacing, incl. 25° [two rows]	43.0	18.5	0.0201	45,270
		39.0	10	0.0201	83,750
	S3: 310UC158 @ 3.6 m c/c spacing, incl. 25°	40.6	13	0.0201	85,900
Option 2	S1 & S2: Anchor – 15.2 mm VSL 13 strands @ 4.8 m c/c spacing, incl. 45°, 850 kN pre-stress [two rows]	43.0	18	0.001863	4,310
		39.0	13	0.001863	5,970
	S3: Anchor – 15.2 mm VSL 10 strands @ 3.6 m c/c spacing, incl. 45°, 750 kN pre-stress	40.6	17	0.001433	4,680

Note: (1) The adopted prop axial stiffness in the geotechnical design is the minimum required to control wall deformation. Alternative type/layout of props may be considered by the structural designer provided the individual axial prop stiffness ≥ required stiffness per metre run x prop spacing.

(2) Prop connections to be detailed by the structural designer. Internal raked props will require internal structure such as partially constructed basement foundations and floor slab that can support the prop loads without significant deformation.

(3) Sizing of the props and anchors will need to be reviewed during design and confirmed by the project structural engineer. Stated effective length of anchors is free unbonded length only. SW-RCD type anchors assumed, allowance given for free length to SW ECBF + 50% estimated bonded length in 150 mm bore

4 Construction sequence

The following summarises the assumed construction sequence.

Option 1: Temporary Props

Section 1 and Section 2 (S1 & S2) Option 1 - Props – Refer Figure 4.1 for indicative staging schematic:

1 Install retaining piles and capping beam.

2 Undertake bulk excavation to 3 m below ground level (42.5 mRL).

3 Form a temporary berm with a 1.0 m bench, extending from 42.5 mRL to the maximum excavation level of 35.1 mRL, with a 1V:2H batter slope.

4 Install the upper layer of raking props, connected to the waler beam at 43.0 mRL. The props shall be inclined at 25° and installed at 4.8 m centres, bearing onto rigid support at basement level. This will require partial construction of the basement ground beams and floor slab within the central portion of the excavation.

5 Undertake bulk excavation to 7.5 m below ground level (38.5 mRL).

6 Form a temporary berm with a 1.0 m bench, extending from 38.5 mRL to the maximum excavation level of 35.1 mRL, with a 1V:2H batter slope.

7 Install the next layer of raking props, connected to the retaining wall at 39.0 mRL. The props shall be inclined at 25° and installed at 4.8 m centres, bearing onto rigid support at basement level. This will require partial construction of the basement ground beams and floor slab within the central portion of the excavation.

8 Undertake bulk excavation to the final excavation level of 35.1 mRL. This represents the end of the temporary load case assessed.

9 Construct the basement floor slabs in a bottom-up sequence. This stage has not been modelled or shown in the staging schematic.

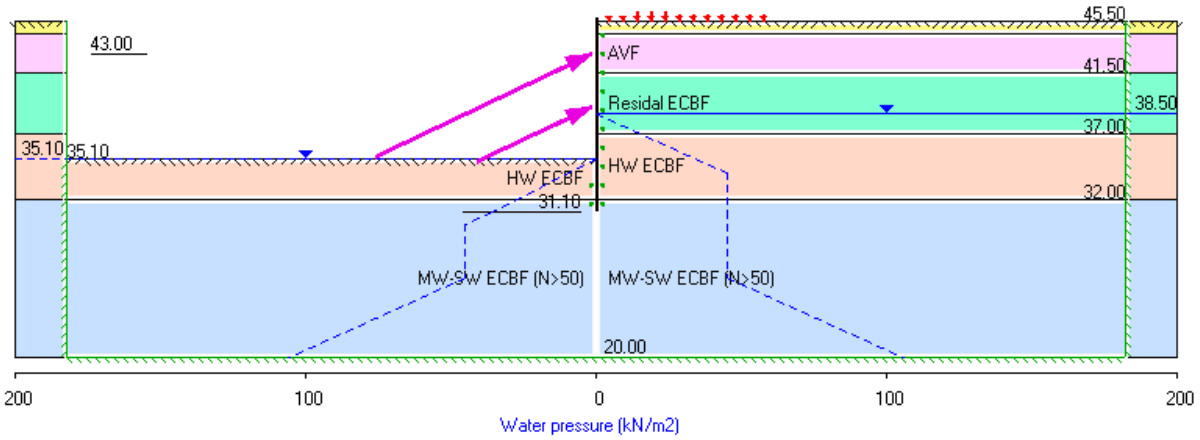

Figure 4.1: S1 and S2 (Option 1 - Props) staging schematic.

Section 3 (S3) Option 1 – Props – Refer to Figure 4.2 for indicative staging schematic:

1 Install retaining piles and capping beam.

2 Undertake bulk excavation to 2.0 m below ground level (40.6 mRL).

3 Form a temporary berm with a 1.0 m bench, extending from 40.6 mRL to the maximum excavation level of 35.1 mRL, with a 1V:2H batter slope.

4 Install the upper layer of raking props, connected to the waler beam at 40.7 mRL. The props shall be inclined at 25° and installed at 3.6 m centres, bearing onto rigid support at basement level. This will require partial construction of the basement ground beams and floor slab within the central portion of the excavation.

5 Undertake bulk excavation to 5.6 m below ground level (35.1 mRL). This represents the end of the temporary load case assessed.

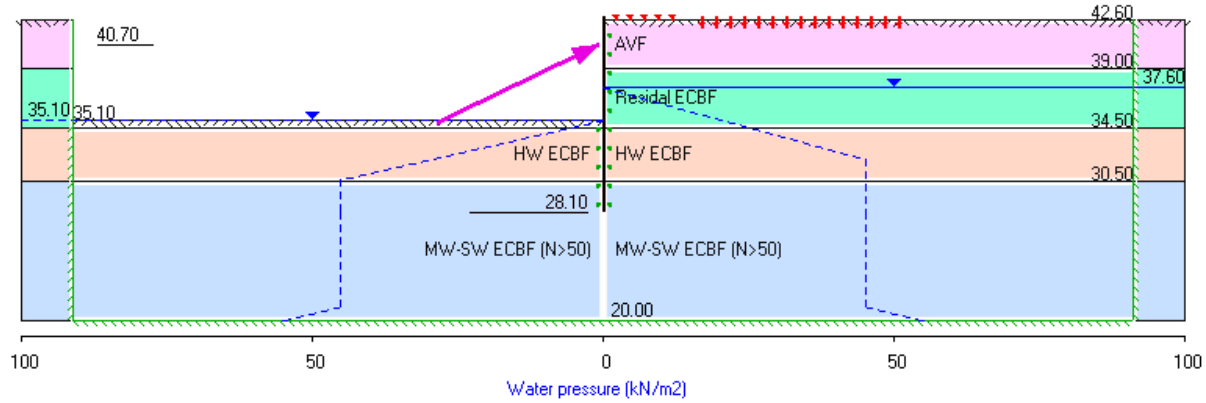

Figure 4.2: S3 (Option 1 - Props) staging schematic.

Option 2: Temporary Anchors

Section 1 and Section 2 (S1 & S2) Option 2 – Anchors, refer to Figure 4.3 for indicative staging schematic:

1 Install retaining piles and capping beam.

2 Undertake bulk excavation to 3 m below ground level (42.5 mRL).

3 Install the upper layer of ground anchors, connected to the waler beam at RL 43.0 m. The anchors shall be inclined at 45°, installed at 4.8 m centres. Each anchor shall be pre-stressed to 850 kN.

4 Undertake bulk excavation to 7.5 m below ground level (38.5 mRL). Dewatering shall be undertaken during excavation.

5 Install the next layer of anchors, connected to the retaining wall at 39.0 mRL. The anchors shall be inclined at 45°, installed at 4.8 m centres. Each anchor shall be pre-stressed to 850 kN.

6 Undertake bulk excavation to the final excavation level of 35.1 mRL. This represents the end of the temporary load case assessed.

7 Construct the basement floor slabs in a bottom-up sequence. This stage has not been modelled or shown in the staging schematic.

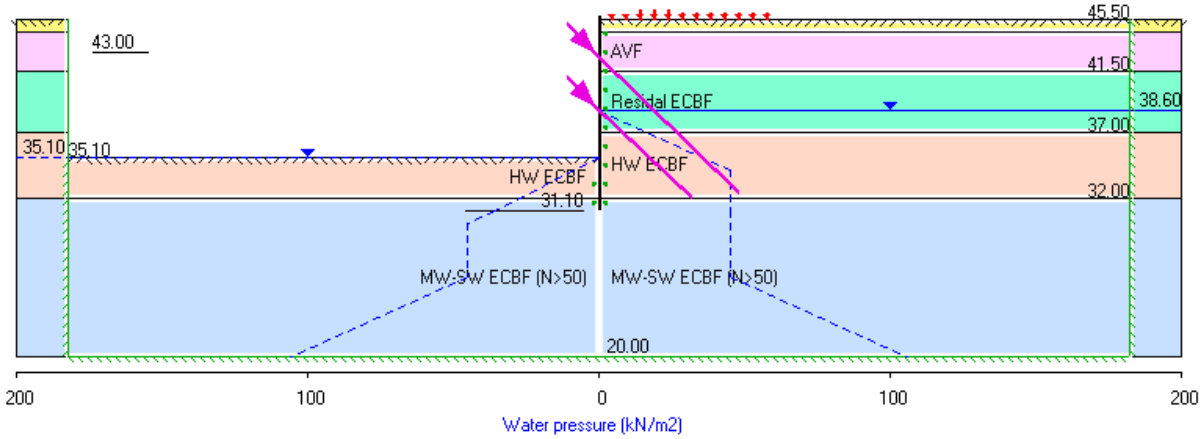

Figure 4.3: S1 and S2 (Option 2 - Anchors) staging schematic.

Section 3 (S3) Option 2 – Anchors, refer to Figure 4.4 for indicative staging schematic:

1 Install retaining piles and capping beam.

2 Undertake bulk excavation to 2.5 m below ground level (40.1 mRL).

3 Install the upper layer of ground anchors, connected to the waler beam at RL 40.6 m. The anchors shall be inclined at 45°, installed at 3.6 m centres. Each anchor shall be pre-stressed to 750 kN.

4 Undertake bulk excavation to the final excavation level of 35.1 mRL. This represents the end of the temporary load case assessed.

5 Construct the basement floor slabs in a bottom-up sequence. This stage has not been modelled or shown in the staging schematic.

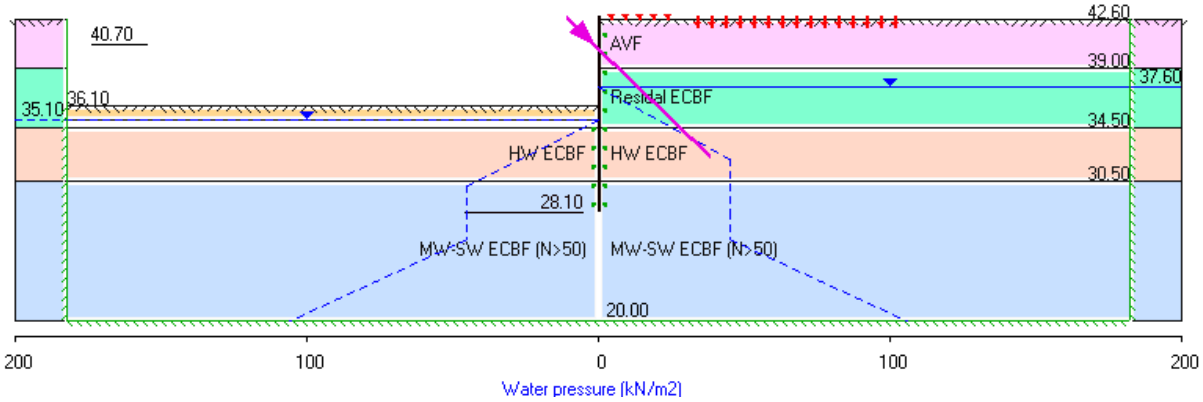

Figure 4.4: S3 (Option 2 - Anchors) staging schematic.

5 Analysis results

A summary of the retaining wall analyses is presented in Table 5.1 below. Pile design forces are presented unfactored as per metre length of wall, and prop forces are unfactored and presented as horizontal component and axial force per metre length of wall (i.e. axial force is corrected for the adopted prop inclination).

Table 5.1: Summary of WALLAP analysis results

Section Analysed			Section 1 (S1)		Section 2 (S2)		Section 3 (S3)	
			Option 1 - Props	Option 2 - Anchors	Option 1 - Props	Option 2 - Anchors	Option 1 - Props	Option 2 - Anchors
Adopted ground level		mRL	45.6		45.5		42.6	
Base of temporary excavation		mRL	35.1					
Wall Type		-	RC piles with temporary props	RC piles with temporary anchors	RC piles with temporary props	RC piles with temporary anchors	RC piles with temporary props	RC piles with temporary anchors
Pile size		mm	900 @ 2400 c/c		900 @ 2400 c/c		750 @ 1800 c/c	
Pile stiffness ($EI_{c=0.75}$) – temp.		kNm^4/m	291,880		291,880		187,670	
Pile embedment into ECBF Rock (SPT N>50) (min)		m	2		2		2	
Temporary Support	Prop/ Anchor types	-	Prop: 310UC158	Anchor: 13x 15.2 mm VSL strands	Prop: 310UC158	Anchor: 13x 15.2 mm VSL strands	Prop: 310UC158	Anchor: 10x 15.2 mm VSL strands
	Elevation	mRL	Upper: 43.0 Lower: 39.0	Upper: 43.0 Lower: 39.0	Upper: 43.0 Lower: 39.0	Upper: 43.0 Lower: 39.0	40.7	40.7
	Spacing	m	4.8	4.8	4.8	4.8	3.6	3.6
	Inclination	degrees (from horiz.)	25	45	25	45	25	45
	Section Area, A	m^2	0.0201	0.001863	0.0201	0.001863	0.0201	0.001433
	Effective length L'	m	Upper: 18.5 Lower: 10	Upper: 18 Lower: 13	Upper: 18.5 Lower: 10	Upper: 18 Lower: 13	13	17
	Axial stiffness EA/L'/m run	kN/m/m run	Upper: 45,270 Lower: 83,750	Upper: 4,310 Lower: 5,970	Upper: 45,270 Lower: 83,750	Upper: 4,310 Lower: 5,970	85,900	4,680
	Axial pre-stress	kN/anchor	-	850	-	850	-	750
Design actions – temp.	Wall Deflection (ground level)	mm	21	14	16	13	11	12
	Wall Deflection (maximum)	mm	21	18	17	14	16	14
	Pile Bending moment (max)	kN.m/m	200	235	215	210	195	195
	Pile Shear force (maximum)	kN/m	120	125	150	120	105	120
	Max. temporary inclined (axial) prop / anchor load	kN/m	Upper: 140 Lower: 180	Upper: 215 Lower: 215	Upper: 130 Lower: 125	Upper: 215 Lower: 190	155	240

Note. 1 Design actions are unfactored (working load). Pile and prop loads provided in per metre run. Load per pile or prop obtained by multiplying by spacing.

2 The adopted prop axial stiffness in the geotechnical design is the minimum required to control wall deformation. Alternative type/layout of props may be considered by the structural designer provided the individual axial prop stiffness ≥ required stiffness per metre run x prop spacing.

3 Prop connections to be detailed by the structural designer. Internal raked props will require internal structure such as partially constructed basement foundations and floor slab that can support the prop loads without significant deformation.

4 Sizing of the props and anchors will need to be reviewed during design and confirmed by the project structural engineer. Stated effective length of anchors is free unbonded length only. SW-RCD type anchors assumed, allowance given for free length to SW ECBF + 50% estimated bonded length in 150 mm bore.

6 Further work and construction considerations

The current revision (v2.1) of this report has been prepared considering limited critical design sections to assist the preliminary design and Fast-Track Approvals stage assessment of effects due to basement construction.

The temporary support layout will change at an, as yet, unspecified location along the northern wall to be compatible with the reduction in retained ground level. Consideration is also required for the support of the existing wall on the northern edge of the ex-Maidment Theatre site. It is expected that these requirements can be incorporated while remaining within the design envelope presented in this revision of the report.

The southern basement wall options may be affected by the staging and methodology to progressively excavate and remove ground anchors from the Hiwa pool hall. The southern basement wall will be assessed at a later design stage.

Additional analysis is also required at future design stages to assess the permanent and seismic loading cases.

The retaining wall design inputs provided in this report present the options being considered at the current preliminary design stage. Alternative options may be considered to support changes in the design requirements. The adopted wall and temporary support stiffness properties presented in this report, based upon a drained wall system, provide the necessary deflection performance to limit the effects on surrounding land, buildings and infrastructure and meet the tolerances of these structures and utilities. Changes at future design stages should consider the envelope of wall deflections assessed in this report. Any exceedance should be compared with the Groundwater and Settlement Effects Report (T+T ref: 1103046-RPT-GEO-106) to confirm that potential adverse effects do not occur.

During excavation the soil between the exposed soldier piles should be progressively scalloped as the excavation proceeds to mitigate against soil falling between the piles. In addition, allowance should be made for fibre reinforced shotcrete between the piles to contain loose soils or shallow face instability due to seepages exposed during excavation. Drainage of the wall face is critical and where shotcrete is used then a vertical strip drain should also be installed behind the shotcrete. A temporary perimeter collector drain should be provided during construction to intercept wall seepage and to protect the excavation subgrade.

No allowance has been made for construction loading (e.g. mobile cranes, gantries, material stockpiles) above the wall. If required, further assessment may be undertaken at detailed design (early contractor) engagement for these construction related surcharges.

Monitoring during construction will be required to verify design assumptions and potential effects of the excavation works. Monitoring is expected to comprise a combination of survey settlement monitoring points, and top of wall deflection survey. Pre- and post- conditions surveys should be carried out for public services present in proximity to the proposed retention and excavation works. Refer to the Groundwater and Settlement Effects Report (T+T ref: 1103046-RPT-GEO-106) for additional details and recommended monitoring plan.

7 Applicability

This report has been prepared for the exclusive use of our client The University of Auckland, with respect to the particular brief given to us and it may not be relied upon in other contexts or for any other purpose, or by any person other than our client, without our prior written agreement.

We understand and agree that our client will submit this report as part of an application under the Fast-Track Approvals Act 2024 and that the Expert Panel as the consenting authority will use this report for the purpose of assessing that application.

Recommendations and opinions in this report are based on data from discrete investigation locations. The nature and continuity of subsoil away from these locations are inferred but it must be appreciated that actual conditions could vary from the assumed model.

Compliance with the Environment Court Practice Note 2023

I, Matthew Kent, confirm that in my capacity as technical reviewer of this report, I have read and abided by the Environment Court of New Zealand's Code of Conduct for Expert Witnesses contained in the Practice Note 2023.

I am a Principal Geotechnical Engineer at Tonkin & Taylor Ltd (T+T), where I specialise in geotechnical engineering investigation, design and construction verification for commercial and infrastructure developments. I have 20 years of industry experience and have worked at T+T since 2013. I am a chartered member of Engineering New Zealand and a chartered professional engineer (CPEng).

Tonkin & Taylor Ltd
Environmental and Engineering Consultants

Report prepared by:



.....

Tommy Lam
Geotechnical Engineer

Authorised for Tonkin & Taylor Ltd by:



.....

Chris Freer
Project Director

Technical review by Matthew Kent, Senior Geotechnical Engineer

\\ttgroup.local\corporate\auckland\projects\1103046\issueddocuments\1103046-rpt-geo-105-v2.1 geotechnical basement retaining design report.docx

Appendix A WALLAP outputs

TONKIN + TAYLOR LTD | Sheet No.
Program: WALLAP Version 6.09 Revision A61.B78.R61 | Job No.
Licensed from GEOSOLVE | Made by :
Data filename/Run ID: 20261027_UoA_Section1_Anc_DeflectionEnvelope
New data set - contains default parameters | Date:28-10-2026
Please modify / add | Checked :

Units: kN,m

INPUT DATA

SOIL PROFILE

Stratum no.	Elevation of top of stratum	Soil types Left side	Right side
1	45.50	1 Fill	1 Fill
2	44.50	6 AVF	6 AVF
3	41.50	2 Residal ECBF	2 Residal ECBF
4	37.00	3 HW ECBF	3 HW ECBF
5	32.00	4 MW-SW ECBF (N>50)	4 MW-SW ECBF (N>50)

SOIL PROPERTIES

No.	Soil type Description	Bulk density kN/m3	Young's Modulus Eh,kN/m2	At rest coeff. Ko	Consol state. NC/OC	Active limit Ka	Passive limit Kp	Cohesion kN/m2
	(Datum elev.)		(dEh/dy)	(dKo/dy)	(Nu)	(Kac)	(Kpc)	(dc/dy)
1	Fill	17.00	10000	0.530	OC	0.311	3.812	2.000d
				(0.300)		(1.297)	(5.289)	
2	Residal ECBF	18.00	20000	0.500	OC	0.285	4.288	5.000d
				(0.300)		(1.238)	(5.694)	
3	HW ECBF	19.00	50000	0.430	OC	0.229	5.879	10.00d
				(0.250)		(1.101)	(6.968)	
4	MW-SW ECBF (N>50)	20.00	150000	0.360	OC	0.182	8.378	50.00d
				(0.250)		(0.975)	(8.793)	
5	Structural fill	20.00	150000	0.290	OC	0.143	12.57	0.0d
				(0.200)		(0.857)	(11.567)	
6	AVF	18.00	20000	0.530	OC	0.311	3.812	5.000d
				(0.300)		(1.297)	(5.289)	

Additional soil parameters associated with Ka and Kp

No.	Soil type Description	--- parameters for Ka --- Soil friction angle	Wall adhesion coeff.	Back-fill angle	--- parameters for Kp --- Soil friction angle	Wall adhesion coeff.	Back-fill angle
1	Fill	28.00	0.639	0.00	28.00	0.469	0.00
2	Residal ECBF	30.00	0.634	0.00	30.00	0.464	0.00
3	HW ECBF	35.00	0.619	0.00	35.00	0.450	0.00
4	MW-SW ECBF (N>50)	40.00	0.602	0.00	40.00	0.434	0.00
5	Structural fill	45.00	0.581	0.00	45.00	0.414	0.00
6	AVF	28.00	0.639	0.00	28.00	0.469	0.00

GROUND WATER CONDITIONS

Density of water = 10.00 kN/m3
Initial water pressure profile = Profile number 5

Automatic water pressure balancing at toe of wall : No

Water press. profile no.	Left side Point no.	Elev. m	Piezo elev. m	Water press. kN/m2	Right side Point no.	Elev. m	Piezo elev. m	Water press. kN/m2
1	1	35.10	35.10	0.0	1	43.00	43.00	0.0
	2	30.10	34.60	45.0	2	38.50	43.00	45.0
	3	26.10	30.60	45.0	3	21.00	25.50	45.0
2	1	38.00	38.00	0.0	1	43.00	43.00	0.0
	2	33.50	38.00	45.0	2	38.50	43.00	45.0
	3	21.00	25.50	45.0	3	21.00	25.50	45.0
3	1	35.10	35.10	0.0	1	38.60	38.60	0.0
	2	30.10	34.60	45.0				
	3	26.10	30.60	45.0				
4	Not defined							
5	1	42.50	42.50	0.0	1	43.00	43.00	0.0
	2	38.00	42.50	45.0	2	38.50	43.00	45.0
	3	26.00	30.50	45.0	3	26.00	30.50	45.0

WALL PROPERTIES

Type of structure = Fully Embedded Wall
Elevation of toe of wall = 30.00
Maximum finite element length = 1.00 m
Youngs modulus of wall E = 2.9000E+07 kN/m2
Moment of inertia of wall I = 0.013400 m4/m run
E.I = 388600 kN.m2/m run
Yield Moment of wall = Not defined

STRUTS and ANCHORS

Prop no.	Elev.	Prop spacing m	Cross-section area sq.m	Youngs modulus kN/m2	Free length m	Inclin-ation (degs)	Pre-stress /prop kN	Strut or Anchor	Allow tension ?	L/R
1	43.00	4.80	0.001863	2.000E+08	18.00	45.00	850.0	Anchor	n/a	L
2	39.00	4.80	0.001863	2.000E+08	13.00	45.00	850.0	Anchor	n/a	L
3	41.10	1.00	0.150000	3.000E+07	20.00	0.00	0	Strut	No	L
4	36.10	1.00	0.150000	3.000E+07	20.00	0.00	0	Strut	No	L
5	46.10	1.00	0.150000	3.000E+07	20.00	0.00	0	Strut	No	L

SURCHARGE LOADS

Surcharge no.	Elev.	Distance from wall	Length parallel to wall	Width perpend. to wall	Surcharge(kN/m2) Near edge	Far edge	Soil Cat.	Soil type	Part fact.	Short Q reduc. fact.
1	45.50	-10.00(R)	10.00	15.00	12.00	=	--	--	--	--
2	45.50	-0.10(R)	10.00	8.90	5.00	=	--	--	--	--

Note: L = Left side, R = Right side

CONSTRUCTION STAGES

Construction stage no.	Stage description
1	Apply surcharge no.1 at elevation 45.50
2	Apply surcharge no.2 at elevation 45.50
3	Change EI of wall to 291880 kN.m2/m run
	Reset wall displacements to zero at this stage
4	Excavate to elevation 42.50 on LEFT side
5	Install strut or anchor no.1 at elevation 43.00
6	Apply water pressure profile no.2
	No analysis at this stage
7	Excavate to elevation 38.00 on LEFT side
8	Install strut or anchor no.2 at elevation 39.00
9	Apply water pressure profile no.1
	No analysis at this stage
10	Excavate to elevation 35.10 on LEFT side
11	Fill to elevation 36.10 on LEFT side with soil type 5
12	Apply water pressure profile no.3
13	Install strut or anchor no.4 at elevation 36.10
14	Install strut or anchor no.3 at elevation 41.10
15	Remove strut or anchor no.2 at elevation 39.00
16	Install strut or anchor no.5 at elevation 46.10
17	Remove strut or anchor no.1 at elevation 43.00
18	Change EI of wall to 194590 kN.m2/m run
	Allow wall to relax with new modulus value

Soil-wall interface - Smooth

FACTORS OF SAFETY and ANALYSIS OPTIONS

Stability analysis:
Method of analysis - Strength Factor method
Factor on soil strength for calculating wall depth = 1.50

Parameters for undrained strata:
Minimum equivalent fluid density = 5.00 kN/m3
Maximum depth of water filled tension crack = 0.00 m

Bending moment and displacement calculation:
Method - 2-D finite element model
Open Tension Crack analysis? - No
Active limit arching modelled? - Yes
Non-linear Modulus Parameter (L) = 15.50 m

Boundary conditions:
Length of wall (normal to plane of analysis) = 1000.00 m

Width of excavation/fill on Left side of wall = 40.00 m
Width of excavation/fill on Right side of wall = 40.00 m

Distance to rigid boundary on Left side = 40.00 m
Distance to rigid boundary on Right side = 40.00 m
Elevation of rigid lower boundary = 20.00

Lower rigid boundary at elevation 20.00 - Rough
Rigid boundary on Left side - Rough
Rigid boundary on Right side - Rough

OUTPUT OPTIONS

Stage no.	Stage description	Displacement Bending mom. Shear force	Active, Passive pressures	Graph. output
1	Apply surcharge no.1 at elev. 45.50	Yes	Yes	Yes
2	Apply surcharge no.2 at elev. 45.50	Yes	Yes	Yes
3	Change EI of wall to 291880kN.m2/m run	No	No	No
4	Excav. to elev. 42.50 on LEFT side	Yes	Yes	Yes
5	Install prop no.1 at elev. 43.00	Yes	Yes	Yes
6	Apply water pressure profile no.2	No	No	No
7	Excav. to elev. 38.00 on LEFT side	Yes	Yes	Yes
8	Install prop no.2 at elev. 39.00	Yes	Yes	Yes
9	Apply water pressure profile no.1	No	No	No
10	Excav. to elev. 35.10 on LEFT side	Yes	Yes	Yes
11	Fill to elev. 36.10 on LEFT side	No	No	No
12	Apply water pressure profile no.3	No	No	No
13	Install prop no.4 at elev. 36.10	Yes	Yes	Yes
14	Install prop no.3 at elev. 41.10	Yes	Yes	Yes
15	Remove prop no.2 at elev. 39.00	Yes	Yes	Yes
16	Install prop no.5 at elev. 46.10	Yes	Yes	Yes
17	Remove prop no.1 at elev. 43.00	Yes	Yes	Yes
18	Change EI of wall to 194590kN.m2/m run	No	No	No
*	Summary output	Yes	-	Yes

Program WALLAP - Copyright (C) 2026 by DL Borin, distributed by GEOSOLVE
150 St. Alphonsus Road, London SW4 7BW, UK www.geosolve.co.uk

Units: kN,m

Stage No.4 Excav. to elev. 42.50 on LEFT side

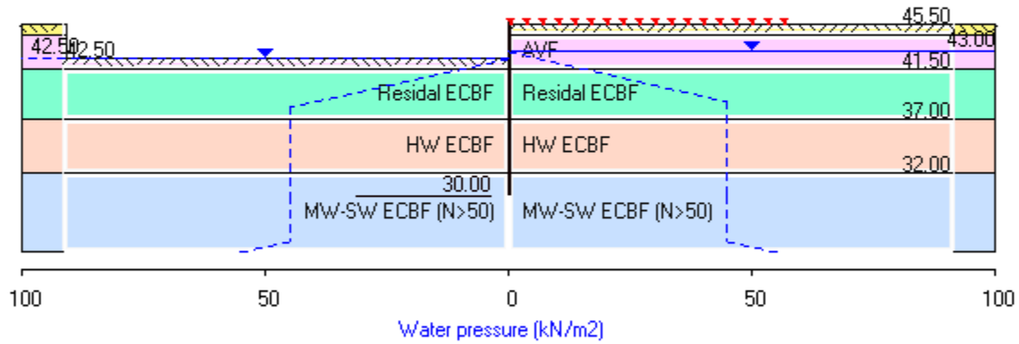

TONKIN + TAYLOR LTD | Sheet No.
Program: WALLAP Version 6.09 Revision A61.B78.R61 | Job No.
Licensed from GEOSOLVE | Made by :
Data filename/Run ID: 20261027_UoA_Section1_Anc_DeflectionEnvelope
New data set - contains default parameters | Date:28-10-2026
Please modify / add | Checked :

Units: kN,m

Stage No. 4 Excavate to elevation 42.50 on LEFT side

STABILITY ANALYSIS of Fully Embedded Wall according to Strength Factor method
Factor of safety on soil strength

Stage No.	Ground level Act.	Ground level Pass.	Prop Elev.	FoS for toe elev. = 30.00 Factor of Safety	Moment equilib. at elev.	Toe elev. for FoS = 1.500 Toe elev.	Wall Penetr -ation	Direction of failure
4	45.50	42.50	Cant.	3.302	31.27	37.79	4.71	R to L

BENDING MOMENT and DISPLACEMENT ANALYSIS of Fully Embedded Wall
Analysis options
2-D finite element model. Active limit arching modelled.
Soil deformations are elastic until the active or passive limit is reached
Open Tension Crack analysis - No

Length of wall perpendicular to section = 1000.00m
Rigid boundaries: Left side 40.00m from wall Rough
Right side 40.00m from wall Rough
Lower boundary at elevation 20.00m Rough
Soil-wall interface Smooth

*** Wall displacements reset to zero at stage 3

Node no.	Y coord	Nett pressure kN/m2	Wall disp. m	Wall rotation rad.	Shear force kN/m	Bending moment kN.m/m	Prop forces kN/m	EI of wall kN.m2/m
1	46.10	0.00	-0.014	-1.25E-03	0.0	-0.0		291880
2	45.50	0.00	-0.013	-1.25E-03	0.0	0.0		291880
3	44.50	-4.04	-0.012	-1.25E-03	-2.0	-1.8		291880
		-0.15	-0.012	-1.25E-03	-2.0	-1.8		
4	43.75	-4.41	-0.011	-1.24E-03	-3.7	-4.1		291880
5	43.00	-8.60	-0.010	-1.22E-03	-8.6	-8.8		291880
6	42.50	-14.82	-0.010	-1.20E-03	-14.5	-14.4		291880
		11.63	-0.010	-1.20E-03	-14.5	-14.4		
7	41.50	10.48	-0.008	-1.12E-03	-3.4	-23.1		291880
		10.33	-0.008	-1.12E-03	-3.4	-23.1		
8	41.10	5.40	-0.008	-1.08E-03	-0.3	-23.6		291880
9	40.55	2.38	-0.007	-1.03E-03	1.9	-22.9		291880
10	40.00	-1.24	-0.007	-9.84E-04	2.2	-21.5		291880
11	39.00	-4.12	-0.006	-9.00E-04	-0.5	-19.9		291880
12	38.60	-6.91	-0.006	-8.69E-04	-2.7	-20.4		291880
13	38.00	-7.00	-0.005	-8.23E-04	-6.9	-23.2		291880
14	37.00	-8.54	-0.004	-7.32E-04	-14.6	-33.5		291880
		20.16	-0.004	-7.32E-04	-14.6	-33.5		
15	36.10	11.26	-0.004	-6.34E-04	-0.5	-38.5		291880
16	35.10	3.94	-0.003	-5.28E-04	7.1	-33.3		291880
17	34.55	-0.15	-0.003	-4.79E-04	8.1	-28.8		291880
18	34.00	-2.99	-0.003	-4.37E-04	7.3	-24.4		291880
19	33.00	-5.90	-0.002	-3.77E-04	2.8	-18.6		291880
20	32.00	-6.11	-0.002	-3.24E-04	-3.2	-18.7		291880
		18.50	-0.002	-3.24E-04	-3.2	-18.7		
21	31.00	6.49	-0.001	-2.77E-04	9.3	-12.6		291880
22	30.00	-22.86	-0.001	-2.59E-04	1.1	0.0		0
23	29.90	-0.00	-0.001		0	-0.0	0.0	0
24	29.70	-0.08	-0.001		0	-0.0	0.0	0
25	26.85	-0.01	-0.001		0	-0.1	0.0	0

Run ID. 20261027_UoA_Section1_Anc_DeflectionEnvelope | Sheet No.
New data set - contains default parameters | Date:28-10-2026
Please modify / add | Checked :

(continued)

Stage No.4 Excavate to elevation 42.50 on LEFT side

Node no.	Y coord	Nett pressure	Wall disp.	Wall rotation	Shear force	Bending moment	Prop forces	EI of wall
		kN/m2	m	rad.	kN/m	kN.m/m	kN/m	kN.m2/m
26	24.00	-0.05	-0.001	0	-0.2	0.0		0
27	20.00	0.15	-0.000	0	-0.0	0.0		---

LEFT side

Node no.	Y coord	Effective stresses: Water press.	Vertic -al	Active limit	Passive limit	Earth press.	Total earth press.	Adjusted soil modulus
		kN/m2	kN/m2	kN/m2	kN/m2	kN/m2	kN/m2	kN/m2
1	46.10	0.00	0.00	0.00	0.00	0.00	0.00	0.0
2	45.50	0.00	0.00	0.00	0.00	0.00	0.00	0.0
3	44.50	0.00	0.00	0.00	0.00	0.00	0.00	0.0
4	43.75	0.00	0.00	0.00	0.00	0.00	0.00	0.0
5	43.00	0.00	0.00	0.00	0.00	0.00	0.00	0.0
6	42.50	0.00	0.00	0.00	0.00	0.00	0.00	0.0
		0.00	0.00	0.00	26.45	26.45	26.45p	19999
7	41.50	10.00	8.00	0.00	56.95	30.82	40.82	19999
		10.00	8.00	0.00	62.77	28.99	38.99	19999
8	41.10	14.00	11.20	0.00	76.50	27.50	41.50	19999
9	40.55	19.50	15.60	0.00	95.37	27.84	47.34	19999
10	40.00	25.00	20.01	0.00	114.25	27.89	52.89	19999
11	39.00	35.00	28.01	1.79	148.59	30.16	65.16	19999
12	38.60	39.00	31.22	2.71	162.33	30.18	69.18	19999
13	38.00	45.00	36.03	4.08	182.96	31.15	76.15	19999
14	37.00	45.00	54.06	9.22	260.25	39.03	84.03	19999
		45.00	54.06	1.36	387.47	48.90	93.90	49997
15	36.10	45.00	71.19	5.28	488.19	51.38	96.38	49997
16	35.10	45.00	90.24	9.65	600.16	55.75	100.75	49997
17	34.55	45.00	100.72	12.04	661.78	58.12	103.12	49997
18	34.00	45.00	111.20	14.44	723.43	61.13	106.13	49997
19	33.00	45.00	130.28	18.81	835.58	67.80	112.80	49997
20	32.00	45.00	149.38	23.18	947.83	75.69	120.69	49997
		45.00	149.38	0.00	1691.11	74.30	119.30	149992
21	31.00	45.00	169.49	0.00	1859.59	75.26	120.26	149992
22	30.00	45.00	189.61	0.00	2028.22	67.73	112.73	149992
23	29.90	45.00	191.63	0.00	2045.09	79.84	124.84	149992
24	29.70	45.00	195.66	0.00	2078.84	81.19	126.19	149992
25	26.85	45.00	253.13	0.00	2560.40	101.71	146.71	149992
26	24.00	65.00	290.76	4.19	2875.64	115.03	180.03	149992
27	20.00	105.00	331.87	11.67	3220.05	129.70	234.70	149992

RIGHT side

Node no.	Y coord	Effective stresses: Water press.	Vertic -al	Active limit	Passive limit	Earth press.	Total earth press.	Adjusted soil modulus
		kN/m2	kN/m2	kN/m2	kN/m2	kN/m2	kN/m2	kN/m2
1	46.10	0.00	0.00	0.00	0.00	0.00	0.00	0.0
2	45.50	0.00	0.00	0.00	0.00	0.00	0.00	0.0
		0.00	0.00	0.00	10.58	0.00	0.00a	9999
3	44.50	0.00	21.35	4.04	91.98	4.04	4.04a	9999
		0.00	21.35	0.15	107.85	0.15	0.15a	19999
4	43.75	0.00	35.06	4.41	160.12	4.41	4.41a	19999
5	43.00	0.00	48.56	8.60	211.57	8.60	8.60a	19999
6	42.50	5.00	52.50	9.82	226.59	9.82	14.82a	19999
7	41.50	15.00	60.30	12.24	256.34	15.35	30.35	19999
		15.00	60.30	11.00	287.04	13.67	28.67	19999
8	41.10	19.00	63.41	11.88	300.36	17.09	36.09	19999

(continued)

Stage No.4 Excavate to elevation 42.50 on LEFT side

		RIGHT side						
			Effective stresses				Total	Adjusted
Node no.	Y coord	Water press.	Vertic -al	Active limit	Passive limit	Earth press.	earth press.	soil modulus
		kN/m2	kN/m2	kN/m2	kN/m2	kN/m2	kN/m2	kN/m2
9	40.55	24.50	67.68	13.10	318.65	20.46	44.96	19999
10	40.00	30.00	71.94	14.32	336.93	24.13	54.13	19999
11	39.00	40.00	79.70	16.53	370.22	29.28	69.28	19999
12	38.60	44.00	82.82	17.42	383.55	32.09	76.09	19999
13	38.00	45.00	92.49	20.17	425.03	38.15	83.15	19999
14	37.00	45.00	110.30	25.25	501.39	47.57	92.57	19999
		45.00	110.30	14.24	718.09	28.75	73.75	49997
15	36.10	45.00	127.24	18.12	817.72	40.12	85.12	49997
16	35.10	45.00	146.09	22.43	928.52	51.81	96.81	49997
17	34.55	45.00	156.46	24.81	989.50	58.27	103.27	49997
18	34.00	45.00	166.84	27.18	1050.51	64.13	109.13	49997
19	33.00	45.00	185.72	31.50	1161.49	73.70	118.70	49997
20	32.00	45.00	204.61	35.83	1272.52	81.80	126.80	49997
		45.00	204.61	0.00	2153.82	55.80	100.80	149992
21	31.00	45.00	224.50	0.00	2320.50	68.77	113.77	149992
22	30.00	45.00	244.40	0.00	2487.22	90.59	135.59	149992
23	29.90	45.00	246.39	0.00	2503.90	79.84	124.84	149992
24	29.70	45.00	250.37	0.00	2537.25	81.27	126.27	149992
25	26.85	45.00	307.12	7.17	3012.66	101.71	146.71	149992
26	24.00	65.00	343.89	13.86	3320.76	115.08	180.08	149992
27	20.00	105.00	383.62	21.09	3653.57	129.54	234.54	149992

Legend: 14.82 a Soil pressure at active limit
26.45 p Soil pressure at passive limit

Units: kN,m

Stage No.4 Excav. to elev. 42.50 on LEFT side

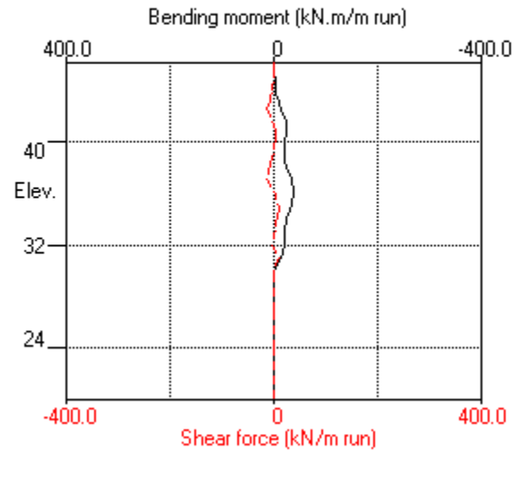

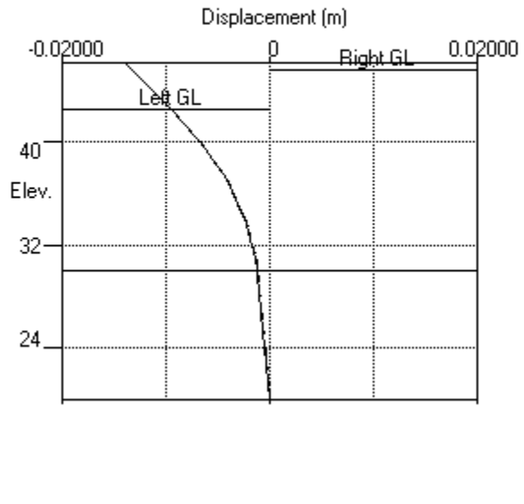

Stage No.4 Excav. to elev. 42.50 on LEFT side

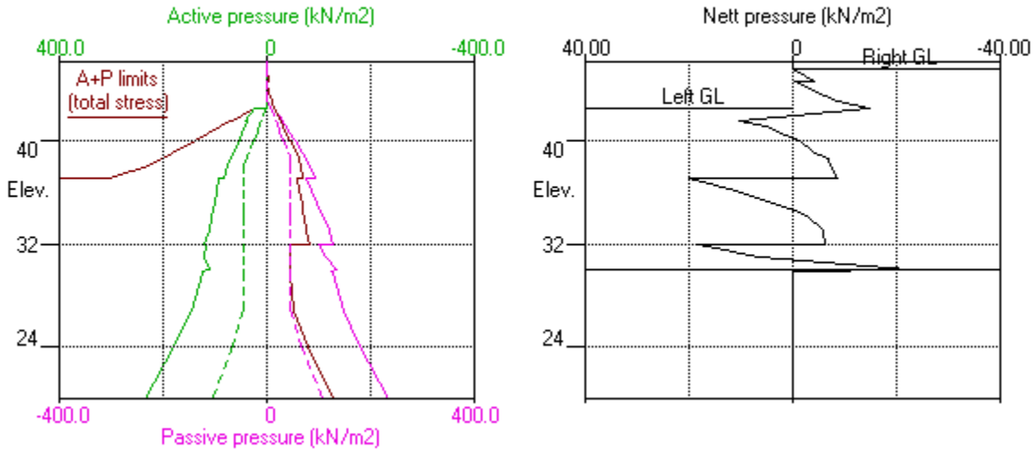

Units: kN,m

Stage No.5 Install prop no.1 at elev. 43.00

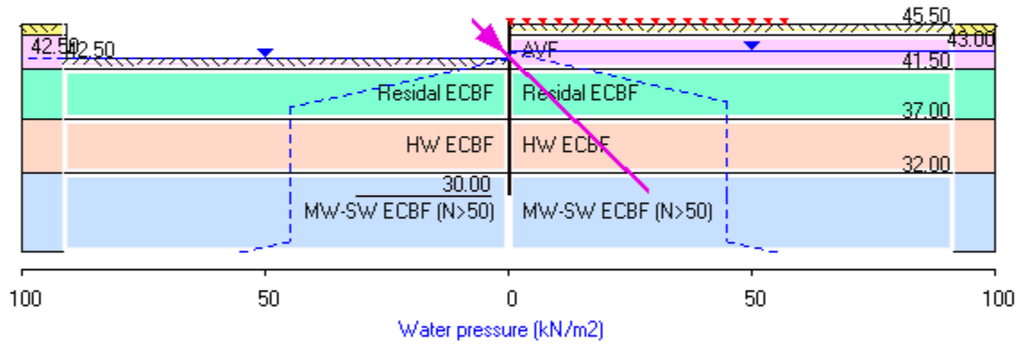

TONKIN + TAYLOR LTD | Sheet No.
Program: WALLAP Version 6.09 Revision A61.B78.R61 | Job No.
Licensed from GEOSOLVE | Made by :
Data filename/Run ID: 20261027_UoA_Section1_Anc_DeflectionEnvelope
New data set - contains default parameters | Date:28-10-2026
Please modify / add | Checked :

Units: kN,m

Stage No. 5 Install strut or anchor no.1 at elevation 43.00

STABILITY ANALYSIS of Fully Embedded Wall according to Strength Factor method
Factor of safety on soil strength

Stage No.	Ground level Act.	Ground level Pass.	Prop Elev.	FoS for toe elev. = 30.00 Factor of Safety	Moment equilib. at elev.	Toe elev. for FoS = 1.500 Toe elev.	Wall Penetr -ation	Direction of failure
5	45.50	42.50	43.00	Conditions not suitable for FoS calc.				

BENDING MOMENT and DISPLACEMENT ANALYSIS of Fully Embedded Wall
Analysis options
2-D finite element model. Active limit arching modelled.
Soil deformations are elastic until the active or passive limit is reached
Open Tension Crack analysis - No

Length of wall perpendicular to section = 1000.00m

Rigid boundaries: Left side 40.00m from wall Rough
Right side 40.00m from wall Rough
Lower boundary at elevation 20.00m Rough
Soil-wall interface Smooth

*** Wall displacements reset to zero at stage 3

Node no.	Y coord	Nett pressure kN/m2	Wall disp. m	Wall rotation rad.	Shear force kN/m	Bending moment kN.m/m	Prop forces kN/m	EI of wall kN.m2/m
1	46.10	0.00	-0.002	5.55E-05	0.0	-0.0		291880
2	45.50	0.00	-0.002	5.55E-05	0.0	0.0		291880
		-10.58	-0.002	5.55E-05	0.0	-0.0		
3	44.50	-16.77	-0.002	6.78E-05	-13.7	-7.1		291880
		-25.62	-0.002	6.78E-05	-13.7	-7.1		
4	43.75	-26.95	-0.002	1.10E-04	-33.4	-25.2		291880
5	43.00	-28.28	-0.002	2.20E-04	-54.1	-58.5	125.2	291880
		-28.28	-0.002	2.20E-04	71.1	-58.5		
6	42.50	-30.40	-0.002	2.97E-04	56.4	-26.8		291880
		-28.52	-0.002	2.97E-04	56.4	-26.8		
7	41.50	-20.43	-0.002	3.29E-04	32.0	15.4		291880
		-20.58	-0.002	3.29E-04	32.0	15.4		
8	41.10	-16.87	-0.002	3.07E-04	24.5	26.5		291880
9	40.55	-14.65	-0.003	2.55E-04	15.8	37.5		291880
10	40.00	-12.52	-0.003	1.87E-04	8.3	43.9		291880
11	39.00	-11.30	-0.003	4.65E-05	-3.6	46.0		291880
12	38.60	-10.83	-0.003	-1.16E-05	-8.0	43.7		291880
13	38.00	-8.52	-0.003	-9.30E-05	-13.8	37.1		291880
14	37.00	-10.40	-0.003	-1.95E-04	-23.3	19.1		291880
		15.51	-0.003	-1.95E-04	-23.3	19.1		
15	36.10	9.77	-0.003	-2.44E-04	-11.9	4.4		291880
16	35.10	5.44	-0.002	-2.65E-04	-4.3	-2.5		291880
17	34.55	2.21	-0.002	-2.68E-04	-2.2	-4.1		291880
18	34.00	-0.45	-0.002	-2.68E-04	-1.7	-4.9		291880
19	33.00	-3.17	-0.002	-2.61E-04	-3.5	-6.8		291880
20	32.00	-5.48	-0.001	-2.40E-04	-7.8	-11.9		291880
		20.38	-0.001	-2.40E-04	-7.8	-11.9		
21	31.00	7.13	-0.001	-2.10E-04	5.9	-9.5		291880
22	30.00	-17.27	-0.001	-1.97E-04	0.9	0.0		0
23	29.90	-0.00	-0.001	0	-0.0	0.0		0

(continued)

Stage No.5 Install strut or anchor no.1 at elevation 43.00

Node no.	Y coord	Nett pressure	Wall disp.	Wall rotation	Shear force	Bending moment	Prop forces	EI of wall
		kN/m2	m	rad.	kN/m	kN.m/m	kN/m	kN.m2/m
24	29.70	-0.08	-0.001	0	-0.0	0.0		0
25	26.85	-0.01	-0.001	0	-0.1	0.0		0
26	24.00	-0.05	-0.001	0	-0.2	0.0		0
27	20.00	0.15	-0.000	0	-0.0	0.0		---

At elev. 43.00 Prop force = 125.2 kN/m run (horiz.)
= 177.1 kN/m run (inclined)

LEFT side

Node no.	Y coord	Effective stresses Water press.	Vertic -al	Active limit	Passive limit	Earth press.	Total earth press.	Adjusted soil modulus
		kN/m2	kN/m2	kN/m2	kN/m2	kN/m2	kN/m2	kN/m2
1	46.10	0.00	0.00	0.00	0.00	0.00	0.00	0.0
2	45.50	0.00	0.00	0.00	0.00	0.00	0.00	0.0
3	44.50	0.00	0.00	0.00	0.00	0.00	0.00	0.0
4	43.75	0.00	0.00	0.00	0.00	0.00	0.00	0.0
5	43.00	0.00	0.00	0.00	0.00	0.00	0.00	0.0
6	42.50	0.00	0.00	0.00	0.00	0.00	0.00	0.0
		0.00	0.00	0.00	26.45	1.88	1.88	19999
7	41.50	10.00	8.00	0.00	56.95	11.78	21.78	19999
		10.00	8.00	0.00	62.77	9.95	19.95	19999
8	41.10	14.00	11.20	0.00	76.50	13.73	27.73	19999
9	40.55	19.50	15.60	0.00	95.37	17.20	36.70	19999
10	40.00	25.00	20.01	0.00	114.25	20.60	45.60	19999
11	39.00	35.00	28.01	1.79	148.59	25.27	60.27	19999
12	38.60	39.00	31.22	2.71	162.33	27.15	66.15	19999
13	38.00	45.00	36.03	4.08	182.96	29.46	74.46	19999
14	37.00	45.00	54.06	9.22	260.25	37.57	82.57	19999
		45.00	54.06	1.36	387.47	45.27	90.27	49997
15	36.10	45.00	71.19	5.28	488.19	49.87	94.87	49997
16	35.10	45.00	90.24	9.65	600.16	55.88	100.88	49997
17	34.55	45.00	100.72	12.04	661.78	58.77	103.77	49997
18	34.00	45.00	111.20	14.44	723.43	61.93	106.93	49997
19	33.00	45.00	130.28	18.81	835.58	68.73	113.73	49997
20	32.00	45.00	149.38	23.18	947.83	75.76	120.76	49997
		45.00	149.38	0.00	1691.11	74.51	119.51	149992
21	31.00	45.00	169.49	0.00	1859.59	75.14	120.14	149992
22	30.00	45.00	189.61	0.00	2028.22	70.15	115.15	149992
23	29.90	45.00	191.63	0.00	2045.09	79.60	124.60	149992
24	29.70	45.00	195.66	0.00	2078.84	80.99	125.99	149992
25	26.85	45.00	253.13	0.00	2560.40	101.57	146.57	149992
26	24.00	65.00	290.76	4.19	2875.64	114.91	179.91	149992
27	20.00	105.00	331.87	11.67	3220.05	129.55	234.55	149992

RIGHT side

Node no.	Y coord	Effective stresses Water press.	Vertic -al	Active limit	Passive limit	Earth press.	Total earth press.	Adjusted soil modulus
		kN/m2	kN/m2	kN/m2	kN/m2	kN/m2	kN/m2	kN/m2
1	46.10	0.00	0.00	0.00	0.00	0.00	0.00	0.0
2	45.50	0.00	0.00	0.00	0.00	0.00	0.00	0.0
		0.00	0.00	0.00	10.58	10.58	10.58p	9999
3	44.50	0.00	21.35	4.04	91.98	16.77	16.77	9999
		0.00	21.35	0.15	107.85	25.62	25.62	19999
4	43.75	0.00	35.06	4.41	160.12	26.95	26.95	19999
5	43.00	0.00	48.56	8.60	211.57	28.28	28.28	19999

(continued)

Stage No.5 Install strut or anchor no.1 at elevation 43.00

		RIGHT side						
			Effective stresses				Total	Adjusted
Node no.	Y coord	Water press.	Vertic -al	Active limit	Passive limit	Earth press.	earth press.	soil modulus
		kN/m2	kN/m2	kN/m2	kN/m2	kN/m2	kN/m2	kN/m2
6	42.50	5.00	52.50	9.82	226.59	25.40	30.40	19999
7	41.50	15.00	60.30	12.24	256.34	27.20	42.20	19999
		15.00	60.30	11.00	287.04	25.52	40.52	19999
8	41.10	19.00	63.41	11.88	300.36	25.61	44.61	19999
9	40.55	24.50	67.68	13.10	318.65	26.85	51.35	19999
10	40.00	30.00	71.94	14.32	336.93	28.12	58.12	19999
11	39.00	40.00	79.70	16.53	370.22	31.56	71.56	19999
12	38.60	44.00	82.82	17.42	383.55	32.98	76.98	19999
13	38.00	45.00	92.49	20.17	425.03	37.98	82.98	19999
14	37.00	45.00	110.30	25.25	501.39	47.97	92.97	19999
		45.00	110.30	14.24	718.09	29.76	74.76	49997
15	36.10	45.00	127.24	18.12	817.72	40.10	85.10	49997
16	35.10	45.00	146.09	22.43	928.52	50.45	95.45	49997
17	34.55	45.00	156.46	24.81	989.50	56.56	101.56	49997
18	34.00	45.00	166.84	27.18	1050.51	62.38	107.38	49997
19	33.00	45.00	185.72	31.50	1161.49	71.90	116.90	49997
20	32.00	45.00	204.61	35.83	1272.52	81.24	126.24	49997
		45.00	204.61	0.00	2153.82	54.13	99.13	149992
21	31.00	45.00	224.50	0.00	2320.50	68.01	113.01	149992
22	30.00	45.00	244.40	0.00	2487.22	87.42	132.42	149992
23	29.90	45.00	246.39	0.00	2503.90	79.60	124.60	149992
24	29.70	45.00	250.37	0.00	2537.25	81.07	126.07	149992
25	26.85	45.00	307.12	7.17	3012.66	101.57	146.57	149992
26	24.00	65.00	343.89	13.86	3320.76	114.96	179.96	149992
27	20.00	105.00	383.62	21.09	3653.57	129.39	234.39	149992

Legend: 12.34 a Soil pressure at active limit
10.58 p Soil pressure at passive limit

Units: kN,m

Stage No.5 Install prop no.1 at elev. 43.00

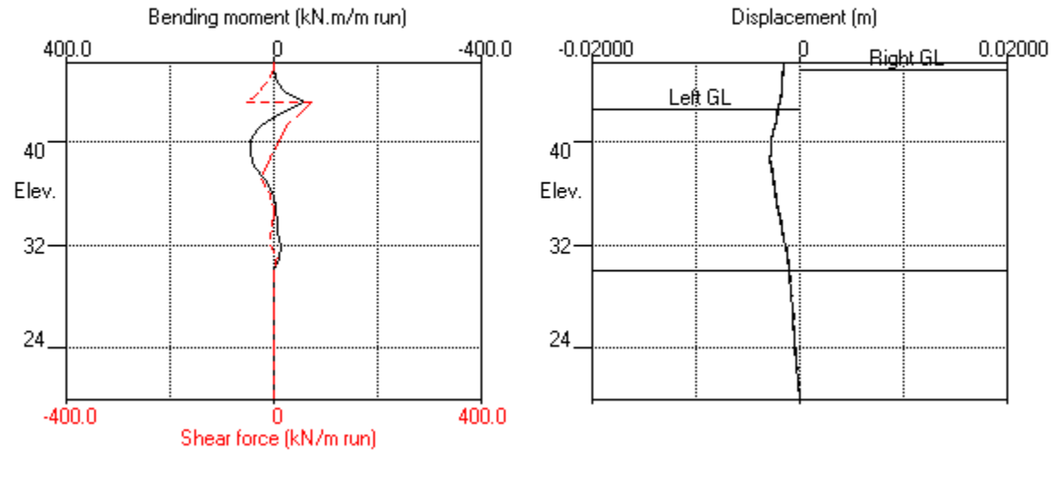

Stage No.5 Install prop no.1 at elev. 43.00

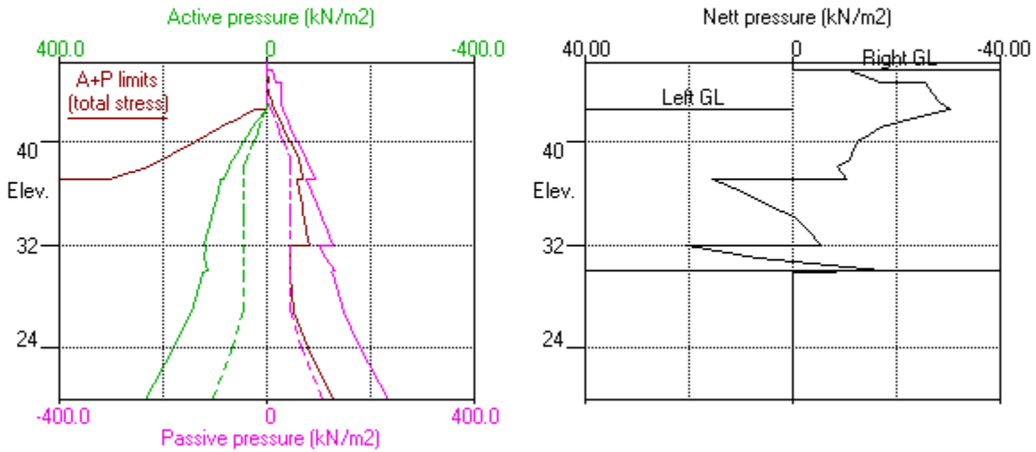

Units: kN,m

Stage No.7 Excav. to elev. 38.00 on LEFT side

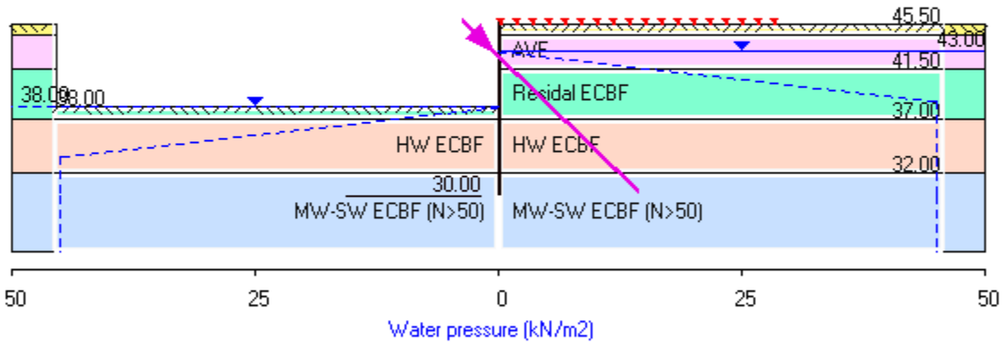

TONKIN + TAYLOR LTD | Sheet No.
Program: WALLAP Version 6.09 Revision A61.B78.R61 | Job No.
Licensed from GEOSOLVE | Made by :
Data filename/Run ID: 20261027_UoA_Section1_Anc_DeflectionEnvelope
New data set - contains default parameters | Date:28-10-2026
Please modify / add | Checked :

Units: kN,m

Stage No. 7 Excavate to elevation 38.00 on LEFT side

STABILITY ANALYSIS of Fully Embedded Wall according to Strength Factor method
Factor of safety on soil strength

Stage No.	Ground level Act.	Ground level Pass.	Prop Elev.	Factor of Safety	Moment equilib. at elev.	Toe elev.	Wall Penetr -ation	Direction of failure
			FoS for toe elev. = 30.00			**Toe elev. for FoS = 1.500**		
7	45.50	38.00	43.00	3.272	n/a	33.97	4.03	R to L

BENDING MOMENT and DISPLACEMENT ANALYSIS of Fully Embedded Wall
Analysis options
2-D finite element model. Active limit arching modelled.
Soil deformations are elastic until the active or passive limit is reached
Open Tension Crack analysis - No

Length of wall perpendicular to section = 1000.00m
Rigid boundaries: Left side 40.00m from wall Rough
Right side 40.00m from wall Rough
Lower boundary at elevation 20.00m Rough
Soil-wall interface Smooth

*** Wall displacements reset to zero at stage 3

Node no.	Y coord	Nett pressure kN/m2	Wall disp. m	Wall rotation rad.	Shear force kN/m	Bending moment kN.m/m	Prop forces kN/m	EI of wall kN.m2/m
1	46.10	0.00	-0.009	6.62E-04	0.0	0.0		291880
2	45.50	0.00	-0.009	6.62E-04	0.0	0.0		291880
		-10.58	-0.009	6.62E-04	0.0	-0.0		
3	44.50	-15.33	-0.010	6.74E-04	-13.0	-7.1		291880
		-22.73	-0.010	6.74E-04	-13.0	-7.1		
4	43.75	-19.64	-0.011	7.15E-04	-28.8	-23.9		291880
5	43.00	-17.42	-0.011	8.15E-04	-42.7	-51.7	145.2	291880
		-17.42	-0.011	8.15E-04	102.5	-51.7		
6	42.50	-15.76	-0.012	8.66E-04	94.2	-3.0		291880
7	41.50	-24.50	-0.012	7.46E-04	74.0	80.0		291880
		-22.82	-0.012	7.46E-04	74.0	80.0		
8	41.10	-24.13	-0.013	6.24E-04	64.6	107.6		291880
9	40.55	-29.18	-0.013	4.00E-04	50.0	139.1		291880
10	40.00	-34.36	-0.013	1.26E-04	32.5	161.7		291880
11	39.00	-47.11	-0.013	-4.37E-04	-8.2	174.6		291880
12	38.60	-52.74	-0.013	-6.68E-04	-28.2	167.4		291880
13	38.00	-59.76	-0.012	-9.83E-04	-61.9	140.6		291880
		-31.29	-0.012	-9.83E-04	-61.9	140.6		
14	37.00	-23.84	-0.011	1.33E-03	-89.5	64.0		291880
		48.88	-0.011	1.33E-03	-89.5	64.0		
15	36.10	29.95	-0.010	1.45E-03	-54.0	4.0		291880
16	35.10	28.14	-0.008	1.42E-03	-25.0	-33.9		291880
17	34.55	15.15	-0.008	1.36E-03	-13.1	-43.2		291880
18	34.00	6.13	-0.007	1.28E-03	-7.2	-47.9		291880
19	33.00	-2.39	-0.006	1.12E-03	-5.4	-51.5		291880
20	32.00	-9.56	-0.005	9.48E-04	-11.3	-58.1		291880
		62.27	-0.005	9.48E-04	-11.3	-58.1		
21	31.00	18.48	-0.004	7.91E-04	29.0	-38.3		291880
22	30.00	-69.59	-0.003	7.28E-04	3.5	0.0		0
23	29.90	-0.00	-0.003	0	-0.0	0.0		0

Run ID. 20261027_UoA_Section1_Anc_DeflectionEnvelope | Sheet No.
New data set - contains default parameters | Date:28-10-2026
Please modify / add | Checked :

(continued)

Stage No.7 Excavate to elevation 38.00 on LEFT side

Node no.	Y coord	Nett pressure	Wall disp.	Wall rotation	Shear force	Bending moment	Prop forces	EI of wall
		kN/m2	m	rad.	kN/m	kN.m/m	kN/m	kN.m2/m
24	29.70	-0.09	-0.003	0	-0.0	0.0		0
25	26.85	-0.02	-0.002	0	-0.2	0.0		0
26	24.00	-0.09	-0.002	0	-0.3	0.0		0
27	20.00	0.26	-0.000	0	-0.0	0.0		---
At elev. 43.00			Prop force =		145.2 kN/m run (horiz.)			
			=		205.3 kN/m run (inclined)			

LEFT side

Node no.	Y coord	Effective stresses: Water press.	Vertic -al	Active limit	Passive limit	Earth press.	Total earth press.	Adjusted soil modulus
		kN/m2	kN/m2	kN/m2	kN/m2	kN/m2	kN/m2	kN/m2
1	46.10	0.00	0.00	0.00	0.00	0.00	0.00	0.0
2	45.50	0.00	0.00	0.00	0.00	0.00	0.00	0.0
3	44.50	0.00	0.00	0.00	0.00	0.00	0.00	0.0
4	43.75	0.00	0.00	0.00	0.00	0.00	0.00	0.0
5	43.00	0.00	0.00	0.00	0.00	0.00	0.00	0.0
6	42.50	0.00	0.00	0.00	0.00	0.00	0.00	0.0
7	41.50	0.00	0.00	0.00	0.00	0.00	0.00	0.0
8	41.10	0.00	0.00	0.00	0.00	0.00	0.00	0.0
9	40.55	0.00	0.00	0.00	0.00	0.00	0.00	0.0
10	40.00	0.00	0.00	0.00	0.00	0.00	0.00	0.0
11	39.00	0.00	0.00	0.00	0.00	0.00	0.00	0.0
12	38.60	0.00	0.00	0.00	0.00	0.00	0.00	0.0
13	38.00	0.00	0.00	0.00	0.00	0.00	0.00	0.0
		0.00	0.00	0.00	28.47	28.47	28.47p	19999
14	37.00	10.00	8.00	0.00	62.78	39.42	49.42	19999
		10.00	8.00	0.00	116.71	83.88	93.88	49998
15	36.10	19.00	16.11	0.00	164.36	74.06	93.06	49998
16	35.10	29.00	25.12	0.00	217.36	66.57	95.57	49998
17	34.55	34.50	30.09	0.00	246.55	60.55	95.05	49998
18	34.00	40.00	35.06	0.00	275.77	56.56	96.56	49998
19	33.00	45.00	49.11	0.23	358.38	56.73	101.73	49998
20	32.00	45.00	68.19	4.60	470.54	60.84	105.84	49998
		45.00	68.19	0.00	1010.91	83.85	128.85	149994
21	31.00	45.00	88.29	0.00	1179.37	68.82	113.82	149994
22	30.00	45.00	108.43	0.00	1348.10	31.80	76.80	149994
23	29.90	45.00	110.45	0.00	1364.99	67.31	112.31	149994
24	29.70	45.00	114.48	0.00	1398.78	68.54	113.54	149994
25	26.85	45.00	172.13	0.00	1881.71	88.83	133.83	149994
26	24.00	45.00	230.12	0.00	2367.60	108.61	153.61	149994
27	20.00	55.00	302.15	6.26	2971.04	133.36	188.36	149994

RIGHT side

Node no.	Y coord	Water press.	Vertic -al	Active limit	Passive limit	Earth press.	earth press.	soil modulus
		kN/m2	kN/m2	kN/m2	kN/m2	kN/m2	kN/m2	kN/m2
1	46.10	0.00	0.00	0.00	0.00	0.00	0.00	0.0
2	45.50	0.00	0.00	0.00	0.00	0.00	0.00	0.0
		0.00	0.00	0.00	10.58	10.58	10.58p	9999
3	44.50	0.00	21.35	4.04	91.98	15.33	15.33	9999
		0.00	21.35	0.15	107.85	22.73	22.73	19999
4	43.75	0.00	35.06	4.41	160.12	19.64	19.64	19999
5	43.00	0.00	48.56	8.60	211.57	17.42	17.42	19999
6	42.50	5.00	52.50	9.82	226.59	10.76	15.76	19999

(continued)

Stage No.7 Excavate to elevation 38.00 on LEFT side

		RIGHT side						
			Effective stresses				Total	Adjusted
Node no.	Y coord	Water press.	Vertic -al	Active limit	Passive limit	Earth press.	earth press.	soil modulus
		kN/m2	kN/m2	kN/m2	kN/m2	kN/m2	kN/m2	kN/m2
7	41.50	15.00	60.30	12.24	256.34	9.50	24.50A	19999
		15.00	60.30	11.00	287.04	7.82	22.82A	19999
8	41.10	19.00	63.41	11.88	300.36	5.13	24.13A	19999
9	40.55	24.50	67.68	13.10	318.65	4.68	29.18A	19999
10	40.00	30.00	71.94	14.32	336.93	4.36	34.36A	19999
11	39.00	40.00	79.70	16.53	370.22	7.11	47.11A	19999
12	38.60	44.00	82.82	17.42	383.55	8.74	52.74A	19999
13	38.00	45.00	92.49	20.17	425.03	14.76	59.76A	19999
14	37.00	45.00	110.30	25.25	501.39	28.26	73.26	19999
		45.00	110.30	14.24	718.09	0.00	45.00A	49997
15	36.10	45.00	127.24	18.12	817.72	18.12	63.12a	49997
16	35.10	45.00	146.09	22.43	928.52	22.43	67.43a	49997
17	34.55	45.00	156.46	24.81	989.50	34.91	79.91	49997
18	34.00	45.00	166.84	27.18	1050.51	45.43	90.43	49997
19	33.00	45.00	185.72	31.50	1161.49	59.12	104.12	49997
20	32.00	45.00	204.61	35.83	1272.52	70.39	115.39	49997
		45.00	204.61	0.00	2153.82	21.59	66.59	149992
21	31.00	45.00	224.50	0.00	2320.50	50.34	95.34	149992
22	30.00	45.00	244.40	0.00	2487.22	101.39	146.39	149992
23	29.90	45.00	246.39	0.00	2503.90	67.31	112.31	149992
24	29.70	45.00	250.37	0.00	2537.25	68.63	113.63	149992
25	26.85	45.00	307.12	7.17	3012.66	88.84	133.84	149992
26	24.00	45.00	363.89	17.50	3488.32	108.70	153.70	149992
27	20.00	55.00	433.62	30.19	4072.47	133.11	188.11	149992

Legend: 67.43 a Soil pressure at active limit
10.58 p Soil pressure at passive limit
45.00 A Arching - soil pressure below active limit

Units: kN,m

Stage No.7 Excav. to elev. 38.00 on LEFT side

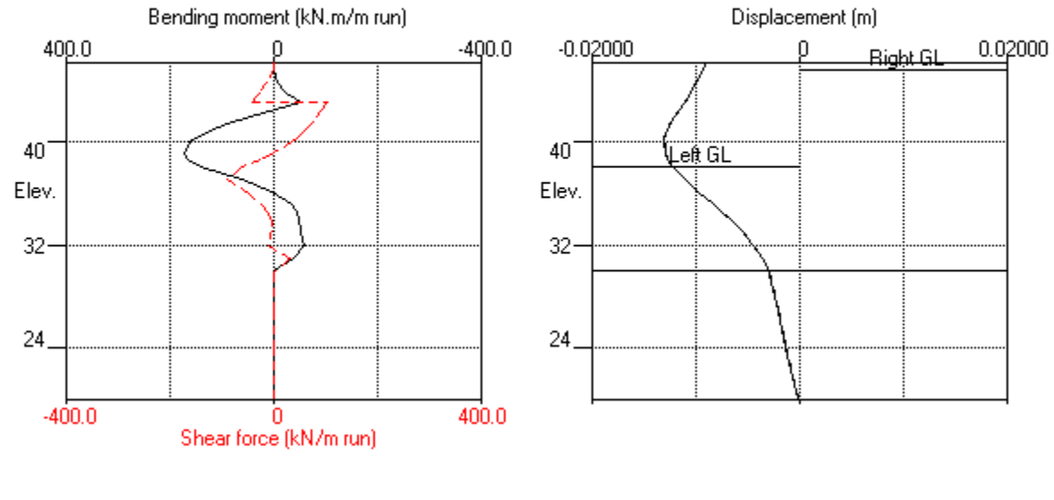

Stage No.7 Excav. to elev. 38.00 on LEFT side

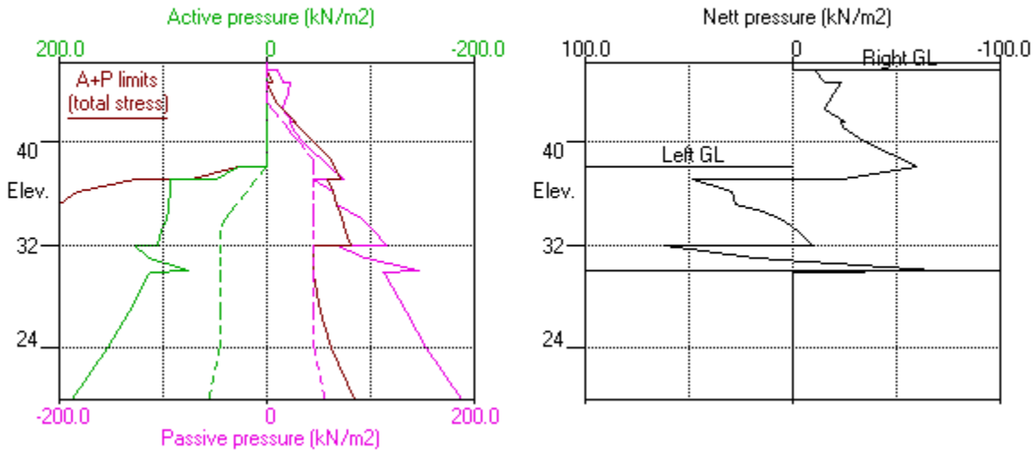

Units: kN,m

Stage No.8 Install prop no.2 at elev. 39.00

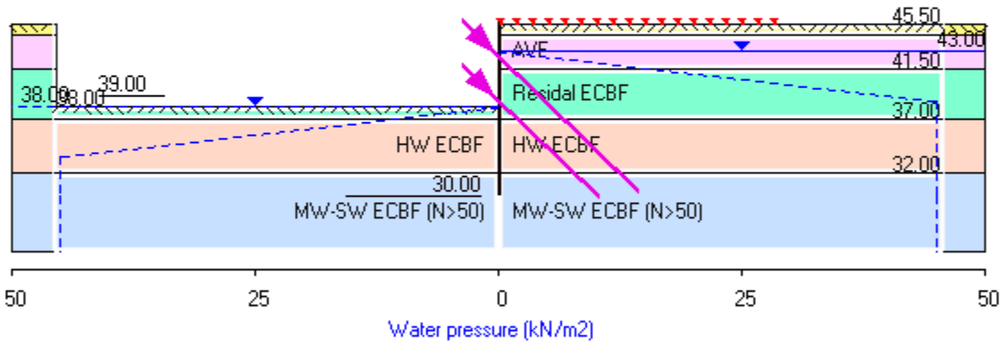

TONKIN + TAYLOR LTD | Sheet No.
Program: WALLAP Version 6.09 Revision A61.B78.R61 | Job No.
Licensed from GEOSOLVE | Made by :
Data filename/Run ID: 20261027_UoA_Section1_Anc_DeflectionEnvelope
New data set - contains default parameters | Date:28-10-2026
Please modify / add | Checked :

Units: kN,m

Stage No. 8 Install strut or anchor no.2 at elevation 39.00

STABILITY ANALYSIS of Fully Embedded Wall according to Strength Factor method
Factor of safety on soil strength

Stage No.	Ground level Act.	Ground level Pass.	Prop Elev.	FoS for toe elev. = 30.00 Factor of Safety	Moment equilib. at elev.	Toe elev. for FoS = 1.500 Toe elev.	Wall Penetr -ation	Direction of failure
8	38.00	45.50		More than one prop. No FoS calc.				

BENDING MOMENT and DISPLACEMENT ANALYSIS of Fully Embedded Wall
Analysis options
2-D finite element model. Active limit arching modelled.
Soil deformations are elastic until the active or passive limit is reached
Open Tension Crack analysis - No

Length of wall perpendicular to section = 1000.00m
Rigid boundaries: Left side 40.00m from wall Rough
Right side 40.00m from wall Rough
Lower boundary at elevation 20.00m Rough
Soil-wall interface Smooth

*** Wall displacements reset to zero at stage 3

Node no.	Y coord	Nett pressure kN/m2	Wall disp. m	Wall rotation rad.	Shear force kN/m	Bending moment kN.m/m	Prop forces kN/m	EI of wall kN.m2/m
1	46.10	0.00	-0.006	3.96E-04	0.0	0.0		291880
2	45.50	0.00	-0.006	3.96E-04	0.0	0.0		291880
		-10.15	-0.006	3.96E-04	0.0	-0.0		
3	44.50	-15.89	-0.007	4.08E-04	-13.0	-6.9		291880
		-23.85	-0.007	4.08E-04	-13.0	-6.9		
4	43.75	-22.77	-0.007	4.49E-04	-30.5	-24.0		291880
5	43.00	-22.16	-0.008	5.52E-04	-47.3	-54.0	137.4	291880
		-22.16	-0.008	5.52E-04	90.0	-54.0		
6	42.50	-22.24	-0.008	6.12E-04	78.9	-12.0		291880
7	41.50	-32.45	-0.008	5.56E-04	51.6	52.5		291880
		-30.77	-0.008	5.56E-04	51.6	52.5		
8	41.10	-33.52	-0.009	4.78E-04	38.7	70.4		291880
9	40.55	-39.59	-0.009	3.39E-04	18.6	86.2		291880
10	40.00	-45.87	-0.009	1.82E-04	-4.9	90.0		291880
11	39.00	-59.14	-0.009	-6.17E-05	-57.4	59.8	125.2	291880
		-59.14	-0.009	-6.17E-05	67.8	59.8		
12	38.60	-63.98	-0.009	-1.55E-04	43.2	82.0		291880
13	38.00	-69.36	-0.009	-3.36E-04	3.2	96.1		291880
		-53.44	-0.009	-3.36E-04	3.2	96.1		
14	37.00	-39.91	-0.008	-6.33E-04	-43.5	73.5		291880
		8.72	-0.008	-6.33E-04	-43.5	73.5		
15	36.10	6.99	-0.008	-8.19E-04	-36.4	38.7		291880
16	35.10	16.29	-0.007	-9.15E-04	-24.8	6.9		291880
17	34.55	9.29	-0.006	-9.27E-04	-17.7	-4.0		291880
18	34.00	3.59	-0.006	-9.20E-04	-14.2	-12.2		291880
19	33.00	-2.69	-0.005	-8.71E-04	-13.7	-24.0		291880
20	32.00	-10.40	-0.004	-7.73E-04	-20.3	-39.1		291880
		59.76	-0.004	-7.73E-04	-20.3	-39.1		
21	31.00	19.92	-0.003	-6.63E-04	19.5	-29.5		291880
22	30.00	-53.65	-0.003	-6.15E-04	2.7	0.0		0

(continued)

Stage No.8 Install strut or anchor no.2 at elevation 39.00

Node no.	Y coord	Nett pressure	Wall disp.	Wall rotation	Shear force	Bending moment	Prop forces	EI of wall
		kN/m2	m	rad.	kN/m	kN.m/m	kN/m	kN.m2/m
23	29.90	-0.00	-0.003	0	-0.0	0.0		0
24	29.70	-0.09	-0.003	0	-0.0	0.0		0
25	26.85	-0.02	-0.002	0	-0.2	0.0		0
26	24.00	-0.09	-0.001	0	-0.3	0.0		0
27	20.00	0.26	-0.000	0	-0.0	0.0		---

At elev. 43.00 Prop force = 137.4 kN/m run (horiz.)
= 194.3 kN/m run (inclined)

At elev. 39.00 Prop force = 125.2 kN/m run (horiz.)
= 177.1 kN/m run (inclined)

LEFT side

Node no.	Y coord	Water press.	Effective stresses: Vertic -al	Active limit	Passive limit	Earth press.	Total earth press.	Adjusted soil modulus
		kN/m2	kN/m2	kN/m2	kN/m2	kN/m2	kN/m2	kN/m2
1	46.10	0.00	0.00	0.00	0.00	0.00	0.00	0.0
2	45.50	0.00	0.00	0.00	0.00	0.00	0.00	0.0
3	44.50	0.00	0.00	0.00	0.00	0.00	0.00	0.0
4	43.75	0.00	0.00	0.00	0.00	0.00	0.00	0.0
5	43.00	0.00	0.00	0.00	0.00	0.00	0.00	0.0
6	42.50	0.00	0.00	0.00	0.00	0.00	0.00	0.0
7	41.50	0.00	0.00	0.00	0.00	0.00	0.00	0.0
8	41.10	0.00	0.00	0.00	0.00	0.00	0.00	0.0
9	40.55	0.00	0.00	0.00	0.00	0.00	0.00	0.0
10	40.00	0.00	0.00	0.00	0.00	0.00	0.00	0.0
11	39.00	0.00	0.00	0.00	0.00	0.00	0.00	0.0
12	38.60	0.00	0.00	0.00	0.00	0.00	0.00	0.0
13	38.00	0.00	0.00	0.00	0.00	0.00	0.00	0.0
		0.00	0.00	0.00	28.47	15.91	15.91	19999
14	37.00	10.00	8.00	0.00	62.78	30.40	40.40	19999
		10.00	8.00	0.00	116.71	61.34	71.34	49998
15	36.10	19.00	16.11	0.00	164.36	60.77	79.77	49998
16	35.10	29.00	25.12	0.00	217.36	59.27	88.27	49998
17	34.55	34.50	30.09	0.00	246.55	56.53	91.03	49998
18	34.00	40.00	35.06	0.00	275.77	54.39	94.39	49998
19	33.00	45.00	49.11	0.23	358.38	55.89	100.89	49998
20	32.00	45.00	68.19	4.60	470.54	60.04	105.04	49998
		45.00	68.19	0.00	1010.91	81.48	126.48	149994
21	31.00	45.00	88.29	0.00	1179.37	68.73	113.73	149994
22	30.00	45.00	108.43	0.00	1348.10	39.09	84.09	149994
23	29.90	45.00	110.45	0.00	1364.99	66.85	111.85	149994
24	29.70	45.00	114.48	0.00	1398.78	68.15	113.15	149994
25	26.85	45.00	172.13	0.00	1881.71	88.56	133.56	149994
26	24.00	45.00	230.12	0.00	2367.60	108.44	153.44	149994
27	20.00	55.00	302.15	6.26	2971.04	133.20	188.20	149994

RIGHT side

Node no.	Y coord	Water press.	Effective stresses: Vertic -al	Active limit	Passive limit	Earth press.	Total earth press.	Adjusted soil modulus
		kN/m2	kN/m2	kN/m2	kN/m2	kN/m2	kN/m2	kN/m2
1	46.10	0.00	0.00	0.00	0.00	0.00	0.00	0.0
2	45.50	0.00	0.00	0.00	0.00	0.00	0.00	0.0
		0.00	0.00	0.00	10.58	10.15	10.15	9999
3	44.50	0.00	21.35	4.04	91.98	15.89	15.89	9999
		0.00	21.35	0.15	107.85	23.85	23.85	19999

(continued)

Stage No.8 Install strut or anchor no.2 at elevation 39.00

		RIGHT side						
			Effective stresses				Total	Adjusted
Node no.	Y coord	Water press.	Vertic -al	Active limit	Passive limit	Earth press.	earth press.	soil modulus
		kN/m2	kN/m2	kN/m2	kN/m2	kN/m2	kN/m2	kN/m2
4	43.75	0.00	35.06	4.41	160.12	22.77	22.77	19999
5	43.00	0.00	48.56	8.60	211.57	22.16	22.16	19999
6	42.50	5.00	52.50	9.82	226.59	17.24	22.24	19999
7	41.50	15.00	60.30	12.24	256.34	17.45	32.45	19999
		15.00	60.30	11.00	287.04	15.77	30.77	19999
8	41.10	19.00	63.41	11.88	300.36	14.52	33.52	19999
9	40.55	24.50	67.68	13.10	318.65	15.09	39.59	19999
10	40.00	30.00	71.94	14.32	336.93	15.87	45.87	19999
11	39.00	40.00	79.70	16.53	370.22	19.14	59.14	19999
12	38.60	44.00	82.82	17.42	383.55	19.98	63.98	19999
13	38.00	45.00	92.49	20.17	425.03	24.36	69.36	19999
14	37.00	45.00	110.30	25.25	501.39	35.31	80.31	19999
		45.00	110.30	14.24	718.09	17.62	62.62	49997
15	36.10	45.00	127.24	18.12	817.72	27.78	72.78	49997
16	35.10	45.00	146.09	22.43	928.52	26.98	71.98	49997
17	34.55	45.00	156.46	24.81	989.50	36.74	81.74	49997
18	34.00	45.00	166.84	27.18	1050.51	45.81	90.81	49997
19	33.00	45.00	185.72	31.50	1161.49	58.59	103.59	49997
20	32.00	45.00	204.61	35.83	1272.52	70.44	115.44	49997
		45.00	204.61	0.00	2153.82	21.72	66.72	149992
21	31.00	45.00	224.50	0.00	2320.50	48.81	93.81	149992
22	30.00	45.00	244.40	0.00	2487.22	92.74	137.74	149992
23	29.90	45.00	246.39	0.00	2503.90	66.85	111.85	149992
24	29.70	45.00	250.37	0.00	2537.25	68.24	113.24	149992
25	26.85	45.00	307.12	7.17	3012.66	88.58	133.58	149992
26	24.00	45.00	363.89	17.50	3488.32	108.53	153.53	149992
27	20.00	55.00	433.62	30.19	4072.47	132.95	187.95	149992

Units: kN,m

Stage No.8 Install prop no.2 at elev. 39.00

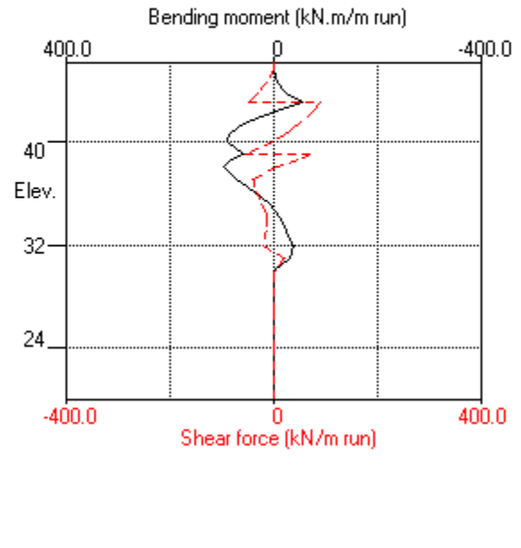

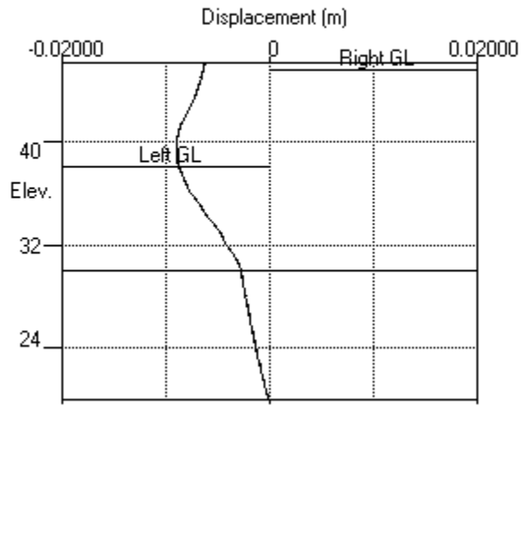

Stage No.8 Install prop no.2 at elev. 39.00

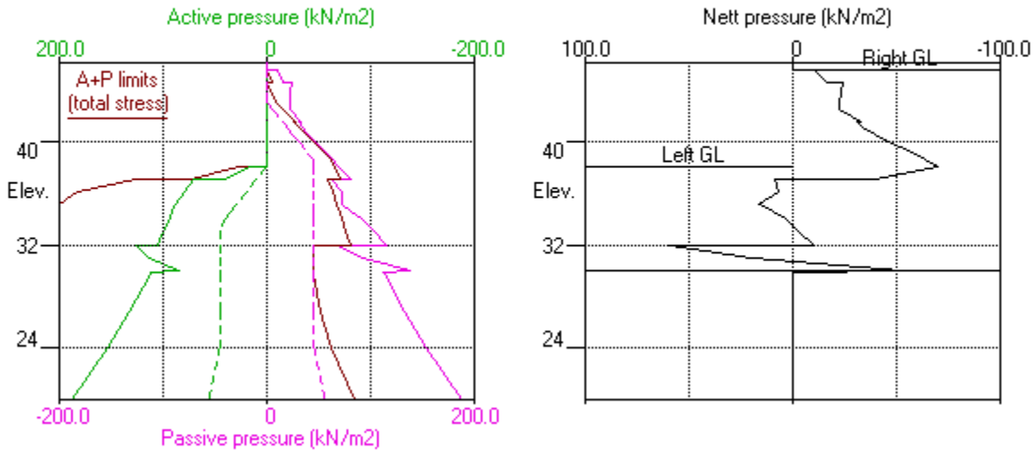


```
TONKIN + TAYLOR LTD                                          | Sheet No.
Program: WALLAP  Version 6.09  Revision A61.B78.R61          | Job No.
                        Licensed from GEOSOLVE               | Made by :
Data filename/Run ID: 20261027_UoA_Section1_Anc_DeflectionEnvelope
New data set - contains default parameters                   | Date:28-10-2026
Please modify / add                                          | Checked :
-----------------------------------------------------------------------------
                                                  Units: kN,m
```

Stage No.10 Excav. to elev. 35.10 on LEFT side

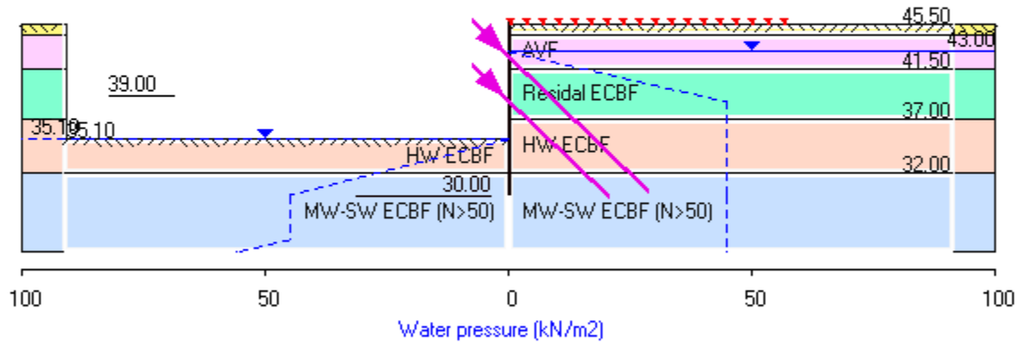

TONKIN + TAYLOR LTD | Sheet No.
Program: WALLAP Version 6.09 Revision A61.B78.R61 | Job No.
Licensed from GEOSOLVE | Made by :
Data filename/Run ID: 20261027_UoA_Section1_Anc_DeflectionEnvelope
New data set - contains default parameters | Date:28-10-2026
Please modify / add | Checked :

Units: kN,m

Stage No. 10 Excavate to elevation 35.10 on LEFT side

STABILITY ANALYSIS of Fully Embedded Wall according to Strength Factor method
Factor of safety on soil strength

Stage No.	Ground level Act.	Ground level Pass.	Prop Elev.	Factor of Safety	Moment equilib. at elev.	Toe elev.	Wall Penetr -ation	Direction of failure
			FoS for toe elev. = 30.00			**Toe elev. for FoS = 1.500**		
10	35.10	45.50	More than one prop. No FoS calc.					

BENDING MOMENT and DISPLACEMENT ANALYSIS of Fully Embedded Wall
Analysis options
2-D finite element model. Active limit arching modelled.
Soil deformations are elastic until the active or passive limit is reached
Open Tension Crack analysis - No

Length of wall perpendicular to section = 1000.00m

Rigid boundaries: Left side 40.00m from wall Rough
Right side 40.00m from wall Rough
Lower boundary at elevation 20.00m Rough
Soil-wall interface Smooth

*** Wall displacements reset to zero at stage 3

Node no.	Y coord	Nett pressure kN/m2	Wall disp. m	Wall rotation rad.	Shear force kN/m	Bending moment kN.m/m	Prop forces kN/m	EI of wall kN.m2/m
1	46.10	0.00	-0.008	1.05E-03	0.0	0.0		291880
2	45.50	0.00	-0.008	1.05E-03	0.0	0.0		291880
		-10.58	-0.008	1.05E-03	0.0	-0.0		
3	44.50	-18.60	-0.009	1.06E-03	-14.6	-7.1		291880
		-29.27	-0.009	1.06E-03	-14.6	-7.1		
4	43.75	-25.60	-0.010	1.10E-03	-35.2	-27.0		291880
5	43.00	-22.89	-0.011	1.22E-03	-53.4	-61.2	144.8	291880
		-22.89	-0.011	1.22E-03	91.4	-61.2		
6	42.50	-20.75	-0.012	1.29E-03	80.5	-18.7		291880
7	41.50	-29.11	-0.013	1.25E-03	55.6	48.2		291880
		-27.43	-0.013	1.25E-03	55.6	48.2		
8	41.10	-28.25	-0.013	1.18E-03	44.4	68.0		291880
9	40.55	-32.82	-0.014	1.04E-03	27.6	87.7		291880
10	40.00	-36.79	-0.015	8.81E-04	8.5	97.5		291880
11	39.00	-47.84	-0.015	5.81E-04	-33.8	85.2	143.7	291880
		-47.84	-0.015	5.81E-04	109.9	85.2		
12	38.60	-50.15	-0.015	4.40E-04	90.3	125.1		291880
13	38.00	-52.87	-0.016	1.39E-04	59.4	169.9		291880
14	37.00	-63.18	-0.015	-5.00E-04	1.4	199.8		291880
		-45.00	-0.015	-5.00E-04	1.4	199.8		
15	36.10	-45.00	-0.015	-1.10E-03	-39.1	182.4		291880
16	35.10	-67.43	-0.013	-1.63E-03	-95.4	120.5		291880
		2.25	-0.013	-1.63E-03	-95.4	120.5		
17	34.55	29.12	-0.012	-1.82E-03	-86.7	68.5		291880
18	34.00	22.89	-0.011	-1.92E-03	-72.4	25.4		291880
19	33.00	16.75	-0.009	-1.92E-03	-52.6	-34.6		291880
20	32.00	-1.02	-0.008	-1.73E-03	-44.8	-77.8		291880
		113.62	-0.008	-1.73E-03	-44.8	-77.8		
21	31.00	51.81	-0.006	-1.50E-03	38.0	-64.8		291880
22	30.00	-116.11	-0.005	-1.39E-03	5.8	-0.0		0

Run ID. 20261027_UoA_Section1_Anc_DeflectionEnvelope | Sheet No.
New data set - contains default parameters | Date:28-10-2026
Please modify / add | Checked :

(continued)

Stage No.10 Excavate to elevation 35.10 on LEFT side

Node no.	Y coord	Nett pressure	Wall disp.	Wall rotation	Shear force	Bending moment	Prop forces	EI of wall
		kN/m2	m	rad.	kN/m	kN.m/m	kN/m	kN.m2/m
23	29.90	-0.00	-0.005	0	-0.0	0.0		0
24	29.70	-0.08	-0.005	0	-0.0	0.0		0
25	26.85	-2.36	-0.003	0	-3.5	0.0		0
26	24.00	-2.05	-0.002	0	-9.8	0.0		0
27	20.00	6.93	-0.000	0	-0.0	0.0		---

At elev. 43.00 Prop force = 144.8 kN/m run (horiz.)
= 204.7 kN/m run (inclined)

At elev. 39.00 Prop force = 143.7 kN/m run (horiz.)
= 203.2 kN/m run (inclined)

LEFT side

Node no.	Y coord	Effective stresses: Water press.	Vertic -al	Active limit	Passive limit	Earth press.	Total earth press.	Adjusted soil modulus
		kN/m2	kN/m2	kN/m2	kN/m2	kN/m2	kN/m2	kN/m2
1	46.10	0.00	0.00	0.00	0.00	0.00	0.00	0.0
2	45.50	0.00	0.00	0.00	0.00	0.00	0.00	0.0
3	44.50	0.00	0.00	0.00	0.00	0.00	0.00	0.0
4	43.75	0.00	0.00	0.00	0.00	0.00	0.00	0.0
5	43.00	0.00	0.00	0.00	0.00	0.00	0.00	0.0
6	42.50	0.00	0.00	0.00	0.00	0.00	0.00	0.0
7	41.50	0.00	0.00	0.00	0.00	0.00	0.00	0.0
8	41.10	0.00	0.00	0.00	0.00	0.00	0.00	0.0
9	40.55	0.00	0.00	0.00	0.00	0.00	0.00	0.0
10	40.00	0.00	0.00	0.00	0.00	0.00	0.00	0.0
11	39.00	0.00	0.00	0.00	0.00	0.00	0.00	0.0
12	38.60	0.00	0.00	0.00	0.00	0.00	0.00	0.0
13	38.00	0.00	0.00	0.00	0.00	0.00	0.00	0.0
14	37.00	0.00	0.00	0.00	0.00	0.00	0.00	0.0
15	36.10	0.00	0.00	0.00	0.00	0.00	0.00	0.0
16	35.10	0.00	0.00	0.00	0.00	0.00	0.00	0.0
		0.00	0.00	0.00	69.68	69.68	69.68p	49999
17	34.55	4.95	5.50	0.00	102.01	93.97	98.92	49999
18	34.00	9.90	11.00	0.00	134.35	85.17	95.07	49999
19	33.00	18.90	21.01	0.00	193.20	76.13	95.03	49999
20	32.00	27.90	31.04	0.00	252.14	68.20	96.10	49999
		27.90	31.04	0.00	699.67	130.72	158.62	149996
21	31.00	36.90	42.08	0.00	792.23	83.88	120.78	149996
22	30.00	45.00	54.06	0.00	892.57	1.22	46.22	149996
23	29.90	45.00	56.07	0.00	909.41	60.02	105.02	149996
24	29.70	45.00	60.09	0.00	943.09	61.02	106.02	149996
25	26.85	45.00	117.57	0.00	1424.61	79.58	124.58	149996
26	24.00	66.00	154.46	0.00	1733.71	85.05	151.05	149996
27	20.00	106.00	196.56	0.00	2086.40	93.88	199.88	149996

RIGHT side

Node no.	Y coord	Effective stresses: Water press.	Vertic -al	Active limit	Passive limit	Earth press.	Total earth press.	Adjusted soil modulus
		kN/m2	kN/m2	kN/m2	kN/m2	kN/m2	kN/m2	kN/m2
1	46.10	0.00	0.00	0.00	0.00	0.00	0.00	0.0
2	45.50	0.00	0.00	0.00	0.00	0.00	0.00	0.0
		0.00	0.00	0.00	10.58	10.58	10.58p	9999
3	44.50	0.00	21.35	4.04	91.98	18.60	18.60	9999
		0.00	21.35	0.15	107.85	29.27	29.27	19999
4	43.75	0.00	35.06	4.41	160.12	25.60	25.60	19999

(continued)

Stage No.10 Excavate to elevation 35.10 on LEFT side

		RIGHT side						
			Effective stresses				Total	Adjusted
Node no.	Y coord	Water press.	Vertic -al	Active limit	Passive limit	Earth press.	earth press.	soil modulus
		kN/m2	kN/m2	kN/m2	kN/m2	kN/m2	kN/m2	kN/m2
5	43.00	0.00	48.56	8.60	211.57	22.89	22.89	19999
6	42.50	5.00	52.50	9.82	226.59	15.75	20.75	19999
7	41.50	15.00	60.30	12.24	256.34	14.11	29.11	19999
		15.00	60.30	11.00	287.04	12.43	27.43	19999
8	41.10	19.00	63.41	11.88	300.36	9.25	28.25A	19999
9	40.55	24.50	67.68	13.10	318.65	8.32	32.82A	19999
10	40.00	30.00	71.94	14.32	336.93	6.79	36.79A	19999
11	39.00	40.00	79.70	16.53	370.22	7.84	47.84A	19999
12	38.60	44.00	82.82	17.42	383.55	6.15	50.15A	19999
13	38.00	45.00	92.49	20.17	425.03	7.87	52.87A	19999
14	37.00	45.00	110.30	25.25	501.39	18.18	63.18A	19999
		45.00	110.30	14.24	718.09	0.00	45.00A	49997
15	36.10	45.00	127.24	18.12	817.72	0.00	45.00A	49997
16	35.10	45.00	146.09	22.43	928.52	22.43	67.43a	49997
17	34.55	45.00	156.46	24.81	989.50	24.81	69.81a	49997
18	34.00	45.00	166.84	27.18	1050.51	27.18	72.18a	49997
19	33.00	45.00	185.72	31.50	1161.49	33.28	78.28	49997
20	32.00	45.00	204.61	35.83	1272.52	52.12	97.12	49997
		45.00	204.61	0.00	2153.82	0.00	45.00a	149992
21	31.00	45.00	224.50	0.00	2320.50	23.96	68.96	149992
22	30.00	45.00	244.40	0.00	2487.22	117.33	162.33	149992
23	29.90	45.00	246.39	0.00	2503.90	60.02	105.02	149992
24	29.70	45.00	250.37	0.00	2537.25	61.10	106.10	149992
25	26.85	45.00	307.12	7.17	3012.66	81.94	126.94	149992
26	24.00	45.00	363.89	17.50	3488.32	108.10	153.10	149992
27	20.00	55.00	433.62	30.19	4072.47	137.95	192.95	149992

Legend: 45.00 a Soil pressure at active limit
10.58 p Soil pressure at passive limit
45.00 A Arching - soil pressure below active limit

Units: kN,m

Stage No.10 Excav. to elev. 35.10 on LEFT side

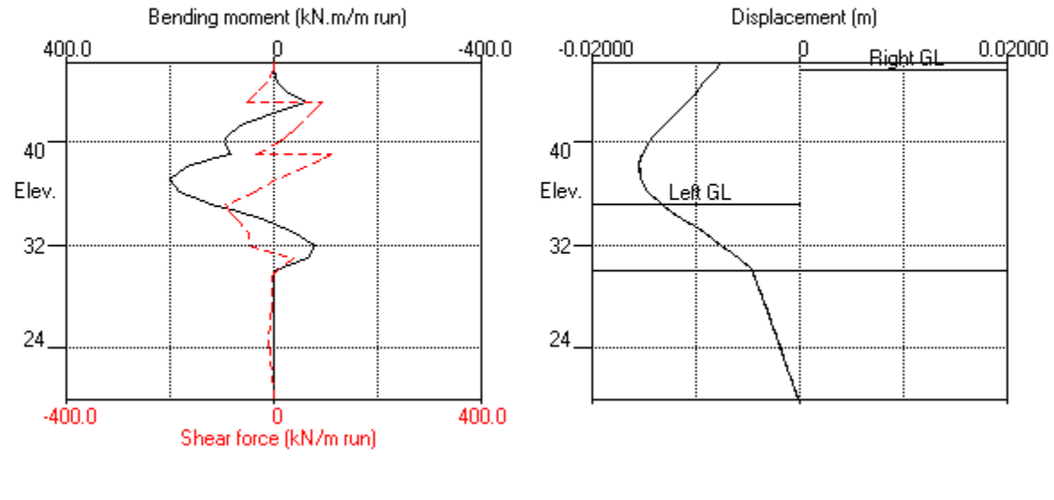

Stage No.10 Excav. to elev. 35.10 on LEFT side

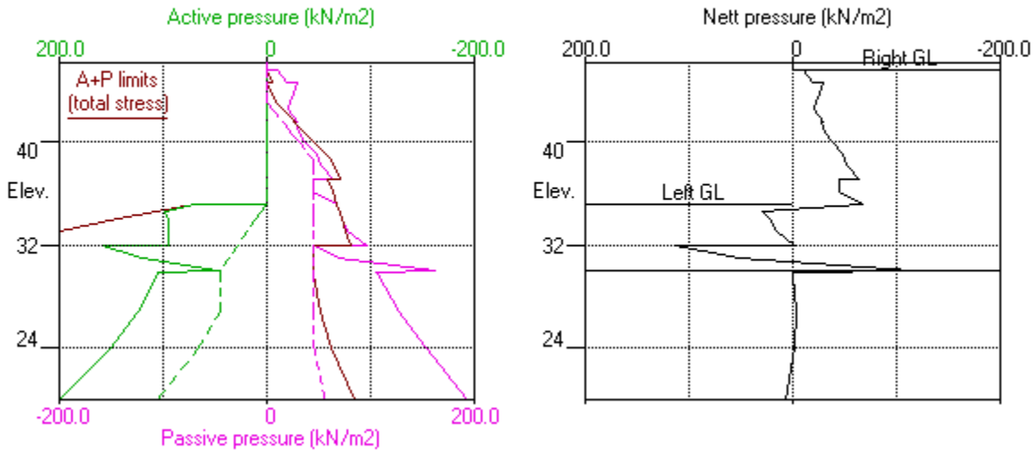

Units: kN,m

Stage No.11 Fill to elev. 36.10 on LEFT side

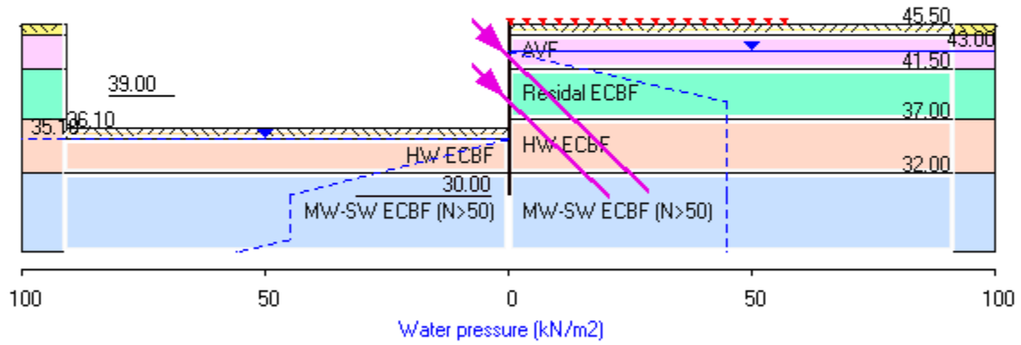

TONKIN + TAYLOR LTD | Sheet No.
Program: WALLAP Version 6.09 Revision A61.B78.R61 | Job No.
Licensed from GEOSOLVE | Made by :
Data filename/Run ID: 20261027_UoA_Section1_Anc_DeflectionEnvelope
New data set - contains default parameters | Date:28-10-2026
Please modify / add | Checked :

Units: kN,m

Stage No. 11 Fill to elevation 36.10 on LEFT side with soil type 5

STABILITY ANALYSIS of Fully Embedded Wall according to Strength Factor method
Factor of safety on soil strength

Stage No.	Ground level Act.	Prop Pass.	FoS for toe elev. = 30.00 Prop Elev.	Factor of Safety	Moment equilib. at elev.	Toe elev. for FoS = 1.500 Toe elev.	Wall Penetr -ation	Direction of failure
11	36.10	45.50	More than one prop. No FoS calc.					

BENDING MOMENT and DISPLACEMENT ANALYSIS of Fully Embedded Wall
Analysis options
2-D finite element model. Active limit arching modelled.
Soil deformations are elastic until the active or passive limit is reached
Open Tension Crack analysis - No

Length of wall perpendicular to section = 1000.00m
Rigid boundaries: Left side 40.00m from wall Rough
Right side 40.00m from wall Rough
Lower boundary at elevation 20.00m Rough
Soil-wall interface Smooth

*** Wall displacements reset to zero at stage 3

Node no.	Y coord	Nett pressure kN/m2	Wall disp. m	Wall rotation rad.	Shear force kN/m	Bending moment kN.m/m	Prop forces kN/m	EI of wall kN.m2/m
1	46.10	0.00	-0.010	1.24E-03	0.0	0.0		291880
2	45.50	0.00	-0.010	1.24E-03	0.0	0.0		291880
		-10.58	-0.010	1.24E-03	0.0	-0.0		
3	44.50	-18.28	-0.011	1.25E-03	-14.4	-7.1		291880
		-28.63	-0.011	1.25E-03	-14.4	-7.1		
4	43.75	-23.59	-0.012	1.29E-03	-34.0	-26.7		291880
5	43.00	-19.77	-0.013	1.41E-03	-50.3	-59.5	150.1	291880
		-19.77	-0.013	1.41E-03	99.9	-59.5		
6	42.50	-16.45	-0.014	1.47E-03	90.8	-12.3		291880
7	41.50	-27.24	-0.016	1.39E-03	69.0	67.0		291880
		-26.00	-0.016	1.39E-03	69.0	67.0		
8	41.10	-30.88	-0.016	1.29E-03	57.6	92.3		291880
9	40.55	-37.60	-0.017	1.10E-03	38.8	118.8		291880
10	40.00	-44.32	-0.017	8.73E-04	16.2	134.0		291880
11	39.00	-56.53	-0.018	4.41E-04	-34.2	125.7	152.0	291880
		-56.53	-0.018	4.41E-04	117.8	125.7		
12	38.60	-61.42	-0.018	2.43E-04	94.2	168.1		291880
13	38.00	-65.17	-0.018	-1.46E-04	56.2	213.2		291880
14	37.00	-70.25	-0.018	-9.18E-04	-11.5	233.8		291880
		-59.24	-0.018	-9.18E-04	-11.5	233.8		
15	36.10	-63.12	-0.017	-1.59E-03	-66.5	199.1		291880
16	35.10	-33.63	-0.015	-2.13E-03	-114.9	101.6		291880
		18.51	-0.015	-2.13E-03	-114.9	101.6		
17	34.55	43.88	-0.013	-2.27E-03	-97.7	41.4		291880
18	34.00	32.97	-0.012	-2.31E-03	-76.6	-5.6		291880
19	33.00	23.27	-0.010	-2.21E-03	-48.5	-64.7		291880
20	32.00	5.00	-0.008	-1.93E-03	-34.3	-100.5		291880
		118.33	-0.008	-1.93E-03	-34.3	-100.5		
21	31.00	48.99	-0.006	-1.64E-03	49.3	-74.7		291880
22	30.00	-134.19	-0.004	-1.52E-03	6.7	-0.0		0

Run ID. 20261027_UoA_Section1_Anc_DeflectionEnvelope | Sheet No.
New data set - contains default parameters | Date:28-10-2026
Please modify / add | Checked :

(continued)

Stage No.11 Fill to elevation 36.10 on LEFT side with soil type 5

Node no.	Y coord	Nett pressure	Wall disp.	Wall rotation	Shear force	Bending moment	Prop forces	EI of wall
		kN/m2	m	rad.	kN/m	kN.m/m	kN/m	kN.m2/m
23	29.90	-0.00	-0.004	0	-0.0	0.0		0
24	29.70	-0.08	-0.004	0	-0.0	0.0		0
25	26.85	-2.35	-0.003	0	-3.5	0.0		0
26	24.00	-2.05	-0.002	0	-9.8	0.0		0
27	20.00	6.93	-0.000	0	-0.0	0.0		---
At elev. 43.00			Prop force =		150.1 kN/m run (horiz.)			
			=		212.3 kN/m run (inclined)			
At elev. 39.00			Prop force =		152.0 kN/m run (horiz.)			
			=		215.0 kN/m run (inclined)			

LEFT side

Node no.	Y coord	Effective stresses: Water press.	Vertic -al	Active limit	Passive limit	Earth press.	Total earth press.	Adjusted soil modulus
		kN/m2	kN/m2	kN/m2	kN/m2	kN/m2	kN/m2	kN/m2
1	46.10	0.00	0.00	0.00	0.00	0.00	0.00	0.0
2	45.50	0.00	0.00	0.00	0.00	0.00	0.00	0.0
3	44.50	0.00	0.00	0.00	0.00	0.00	0.00	0.0
4	43.75	0.00	0.00	0.00	0.00	0.00	0.00	0.0
5	43.00	0.00	0.00	0.00	0.00	0.00	0.00	0.0
6	42.50	0.00	0.00	0.00	0.00	0.00	0.00	0.0
7	41.50	0.00	0.00	0.00	0.00	0.00	0.00	0.0
8	41.10	0.00	0.00	0.00	0.00	0.00	0.00	0.0
9	40.55	0.00	0.00	0.00	0.00	0.00	0.00	0.0
10	40.00	0.00	0.00	0.00	0.00	0.00	0.00	0.0
11	39.00	0.00	0.00	0.00	0.00	0.00	0.00	0.0
12	38.60	0.00	0.00	0.00	0.00	0.00	0.00	0.0
13	38.00	0.00	0.00	0.00	0.00	0.00	0.00	0.0
14	37.00	0.00	0.00	0.00	0.00	0.00	0.00	0.0
15	36.10	0.00	0.00	0.00	0.00	0.00	0.00	0.0
		0.00	0.00	0.00	0.00	0.00	0.00	149995
16	35.10	0.00	20.00	2.86	251.35	33.80	33.80	149995
		0.00	20.00	0.00	187.26	85.94	85.94	49998
17	34.55	4.95	25.50	0.00	219.61	105.25	110.20	49998
18	34.00	9.90	31.01	0.00	251.98	94.09	103.99	49998
19	33.00	18.90	41.03	0.00	310.90	83.19	102.09	49998
20	32.00	27.90	51.08	0.68	369.95	74.81	102.71	49998
		27.90	51.08	0.00	867.56	137.18	165.08	149995
21	31.00	36.90	62.15	0.00	960.30	86.36	123.26	149995
22	30.00	45.00	74.15	0.00	1060.85	0.00	45.00a	149995
23	29.90	45.00	76.16	0.00	1077.70	63.79	108.79	149995
24	29.70	45.00	80.19	0.00	1111.43	64.72	109.72	149995
25	26.85	45.00	137.73	0.00	1593.57	83.19	128.19	149995
26	24.00	66.00	174.69	0.00	1903.17	88.58	154.58	149995
27	20.00	106.00	216.81	0.00	2256.03	97.41	203.41	149995

RIGHT side

Node no.	Y coord	Effective stresses: Water press.	Vertic -al	Active limit	Passive limit	Earth press.	Total earth press.	Adjusted soil modulus
		kN/m2	kN/m2	kN/m2	kN/m2	kN/m2	kN/m2	kN/m2
1	46.10	0.00	0.00	0.00	0.00	0.00	0.00	0.0
2	45.50	0.00	0.00	0.00	0.00	0.00	0.00	0.0
		0.00	0.00	0.00	10.58	10.58	10.58p	9999
3	44.50	0.00	21.35	4.04	91.98	18.28	18.28	9999
		0.00	21.35	0.15	107.85	28.63	28.63	19999

(continued)

Stage No.11 Fill to elevation 36.10 on LEFT side with soil type 5

		RIGHT side						
			Effective stresses				Total	Adjusted
Node no.	Y coord	Water press.	Vertic -al	Active limit	Passive limit	Earth press.	earth press.	soil modulus
		kN/m2	kN/m2	kN/m2	kN/m2	kN/m2	kN/m2	kN/m2
4	43.75	0.00	35.06	4.41	160.12	23.59	23.59	19999
5	43.00	0.00	48.56	8.60	211.57	19.77	19.77	19999
6	42.50	5.00	52.50	9.82	226.59	11.45	16.45	19999
7	41.50	15.00	60.30	12.24	256.34	12.24	27.24a	19999
		15.00	60.30	11.00	287.04	11.00	26.00a	19999
8	41.10	19.00	63.41	11.88	300.36	11.88	30.88a	19999
9	40.55	24.50	67.68	13.10	318.65	13.10	37.60a	19999
10	40.00	30.00	71.94	14.32	336.93	14.32	44.32a	19999
11	39.00	40.00	79.70	16.53	370.22	16.53	56.53a	19999
12	38.60	44.00	82.82	17.42	383.55	17.42	61.42a	19999
13	38.00	45.00	92.49	20.17	425.03	20.17	65.17a	19999
14	37.00	45.00	110.30	25.25	501.39	25.25	70.25a	19999
		45.00	110.30	14.24	718.09	14.24	59.24a	49997
15	36.10	45.00	127.24	18.12	817.72	18.12	63.12a	49997
16	35.10	45.00	146.09	22.43	928.52	22.43	67.43a	49997
17	34.55	45.00	156.46	24.81	989.50	21.31	66.31A	49997
18	34.00	45.00	166.84	27.18	1050.51	26.03	71.03A	49997
19	33.00	45.00	185.72	31.50	1161.49	33.81	78.81	49997
20	32.00	45.00	204.61	35.83	1272.52	52.71	97.71	49997
		45.00	204.61	0.00	2153.82	1.75	46.75	149992
21	31.00	45.00	224.50	0.00	2320.50	29.27	74.27	149992
22	30.00	45.00	244.40	0.00	2487.22	134.19	179.19	149992
23	29.90	45.00	246.39	0.00	2503.90	63.79	108.79	149992
24	29.70	45.00	250.37	0.00	2537.25	64.81	109.81	149992
25	26.85	45.00	307.12	7.17	3012.66	85.54	130.54	149992
26	24.00	45.00	363.89	17.50	3488.32	111.63	156.63	149992
27	20.00	55.00	433.62	30.19	4072.47	141.47	196.47	149992

Legend: 67.43 a Soil pressure at active limit
10.58 p Soil pressure at passive limit
71.03 A Arching - soil pressure below active limit

Units: kN,m

Stage No.11 Fill to elev. 36.10 on LEFT side

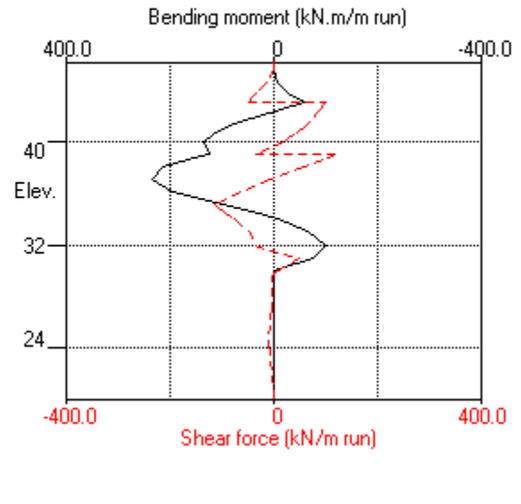

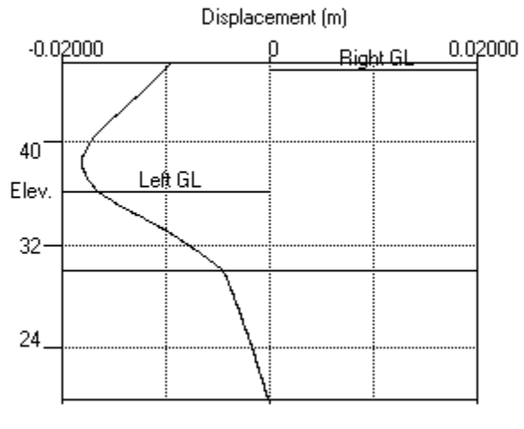

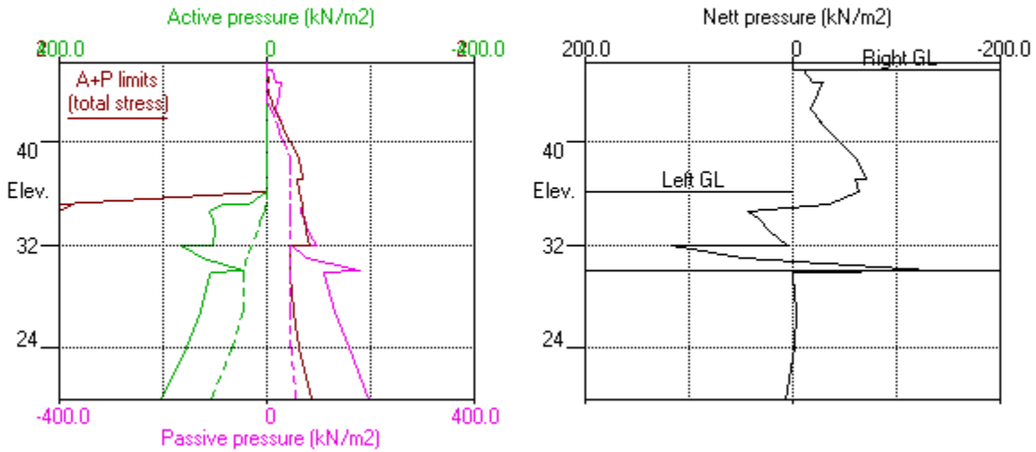

Units: kN,m

Stage No.15 Remove prop no.2 at elev. 39.00

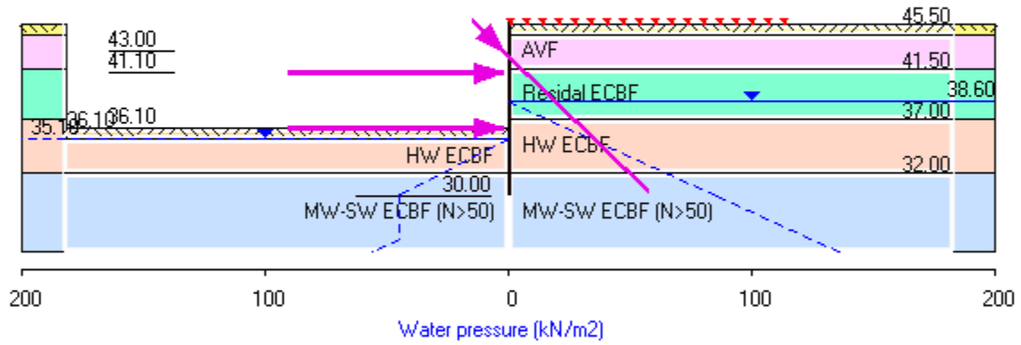

TONKIN + TAYLOR LTD | Sheet No.
Program: WALLAP Version 6.09 Revision A61.B78.R61 | Job No.
Licensed from GEOSOLVE | Made by :
Data filename/Run ID: 20261027_UoA_Section1_Anc_DeflectionEnvelope
New data set - contains default parameters | Date:28-10-2026
Please modify / add | Checked :

Units: kN,m

Stage No. 15 Remove strut or anchor no.2 at elevation 39.00

STABILITY ANALYSIS of Fully Embedded Wall according to Strength Factor method

Factor of safety on soil strength

Stage No.	Ground level Act.	Prop Pass.	FoS for toe elev. = 30.00 Prop Elev.	Factor of Safety	Moment equilib. at elev.	Toe elev. for FoS = 1.500 Toe elev.	Wall Penetr -ation	Direction of failure
15	36.10	45.50	More than one prop. No FoS calc.					

BENDING MOMENT and DISPLACEMENT ANALYSIS of Fully Embedded Wall

Analysis options

2-D finite element model. Active limit arching modelled.
Soil deformations are elastic until the active or passive limit is reached
Open Tension Crack analysis - No

Length of wall perpendicular to section = 1000.00m

Rigid boundaries: Left side 40.00m from wall Rough
Right side 40.00m from wall Rough
Lower boundary at elevation 20.00m Rough
Soil-wall interface Smooth

*** Wall displacements reset to zero at stage 3

Node no.	Y coord	Nett pressure kN/m2	Wall disp. m	Wall rotation rad.	Shear force kN/m	Bending moment kN.m/m	Prop forces kN/m	EI of wall kN.m2/m
1	46.10	0.00	-0.006	1.44E-03	0.0	0.0		291880
2	45.50	0.00	-0.006	1.44E-03	0.0	0.0		291880
		-10.58	-0.006	1.44E-03	0.0	-0.0		
3	44.50	-21.58	-0.008	1.45E-03	-16.1	-7.1		291880
		-35.24	-0.008	1.45E-03	-16.1	-7.1		
4	43.75	-30.50	-0.009	1.50E-03	-40.7	-29.8		291880
5	43.00	-26.90	-0.010	1.63E-03	-62.3	-69.6	143.1	291880
		-26.90	-0.010	1.63E-03	80.8	-69.6		
6	42.50	-20.91	-0.011	1.72E-03	68.9	-32.7		291880
7	41.50	-25.99	-0.013	1.75E-03	45.4	23.4		291880
		-24.75	-0.013	1.75E-03	45.4	23.4		
8	41.10	-26.83	-0.013	1.71E-03	35.1	39.4	75.8	291880
		-26.83	-0.013	1.71E-03	110.9	39.4		
9	40.55	-29.30	-0.014	1.59E-03	95.5	96.1		291880
10	40.00	-31.02	-0.015	1.38E-03	78.9	143.9		291880
11	39.00	-36.01	-0.016	7.94E-04	45.4	205.8		291880
12	38.60	-38.34	-0.017	5.05E-04	30.5	220.9		291880
13	38.00	-45.71	-0.017	4.21E-05	5.3	231.8		291880
14	37.00	-57.64	-0.016	7.21E-04	-46.4	210.2		291880
		-49.81	-0.016	7.21E-04	-46.4	210.2		
15	36.10	-60.56	-0.015	1.28E-03	-96.1	147.1	68.9	291880
		-60.56	-0.015	1.28E-03	-27.2	147.1		
16	35.10	-64.22	-0.014	1.70E-03	-89.6	89.0		291880
		7.33	-0.014	1.70E-03	-89.6	89.0		
17	34.55	35.48	-0.013	1.83E-03	-77.8	40.9		291880
18	34.00	26.33	-0.012	1.88E-03	-60.8	3.4		291880
19	33.00	15.29	-0.010	1.83E-03	-40.0	-44.3		291880
20	32.00	-6.86	-0.008	1.63E-03	-35.8	-76.8		291880
		98.33	-0.008	1.63E-03	-35.8	-76.8		
21	31.00	49.46	-0.007	1.40E-03	38.1	-62.6		291880

Run ID. 20261027_UoA_Section1_Anc_DeflectionEnvelope | Sheet No.
New data set - contains default parameters | Date:28-10-2026
Please modify / add | Checked :

(continued)

Stage No.15 Remove strut or anchor no.2 at elevation 39.00

Node no.	Y coord	Nett pressure	Wall disp.	Wall rotation	Shear force	Bending moment	Prop forces	EI of wall
		kN/m2	m	rad.	kN/m	kN.m/m	kN/m	kN.m2/m
22	30.00	-114.23	-0.006	-1.29E-03	5.7	-0.0		0
23	29.90	0.22	-0.006	0	0.0	0.0	0	
24	29.70	5.81	-0.006	0	0.6	0.0	0	
25	26.85	-2.35	-0.004	0	5.5	0.0	0	
26	24.00	-0.79	-0.003	0	1.1	0.0	0	
27	20.00	0.27	-0.000	0	-0.0	0.0	---	

At elev. 43.00 Prop force = 143.1 kN/m run (horiz.)
= 202.4 kN/m run (inclined)
At elev. 41.10 Prop force = 75.8 kN/m run
At elev. 36.10 Prop force = 68.9 kN/m run

LEFT side

Node no.	Y coord	Effective stresses: Water press.	Vertic -al	Active limit	Passive limit	Earth press.	Total earth press.	Adjusted soil modulus
		kN/m2	kN/m2	kN/m2	kN/m2	kN/m2	kN/m2	kN/m2
1	46.10	0.00	0.00	0.00	0.00	0.00	0.00	0.0
2	45.50	0.00	0.00	0.00	0.00	0.00	0.00	0.0
3	44.50	0.00	0.00	0.00	0.00	0.00	0.00	0.0
4	43.75	0.00	0.00	0.00	0.00	0.00	0.00	0.0
5	43.00	0.00	0.00	0.00	0.00	0.00	0.00	0.0
6	42.50	0.00	0.00	0.00	0.00	0.00	0.00	0.0
7	41.50	0.00	0.00	0.00	0.00	0.00	0.00	0.0
8	41.10	0.00	0.00	0.00	0.00	0.00	0.00	0.0
9	40.55	0.00	0.00	0.00	0.00	0.00	0.00	0.0
10	40.00	0.00	0.00	0.00	0.00	0.00	0.00	0.0
11	39.00	0.00	0.00	0.00	0.00	0.00	0.00	0.0
12	38.60	0.00	0.00	0.00	0.00	0.00	0.00	0.0
13	38.00	0.00	0.00	0.00	0.00	0.00	0.00	0.0
14	37.00	0.00	0.00	0.00	0.00	0.00	0.00	0.0
15	36.10	0.00	0.00	0.00	0.00	0.00	0.00	0.0
		0.00	0.00	0.00	0.00	0.00	0.00	149995
16	35.10	0.00	20.00	2.86	251.35	4.69	4.69	149995
		0.00	20.00	0.00	187.26	76.24	76.24	49998
17	34.55	4.95	25.50	0.00	219.61	98.97	103.92	49998
18	34.00	9.90	31.01	0.00	251.98	90.53	100.43	49998
19	33.00	18.90	41.03	0.00	310.90	82.32	101.22	49998
20	32.00	27.90	51.08	0.68	369.95	75.57	103.47	49998
		27.90	51.08	0.00	867.56	139.46	167.36	149995
21	31.00	36.90	62.15	0.00	960.30	96.29	133.19	149995
22	30.00	45.00	74.15	0.00	1060.85	23.09	68.09	149995
23	29.90	45.00	76.16	0.00	1077.70	77.40	122.40	149995
24	29.70	45.00	80.19	0.00	1111.43	81.92	126.92	149995
25	26.85	45.00	137.73	0.00	1593.57	107.06	152.06	149995
26	24.00	66.00	174.69	0.00	1903.17	122.66	188.66	149995
27	20.00	106.00	216.81	0.00	2256.03	137.51	243.51	149995

RIGHT side

Node no.	Y coord	Effective stresses: Water press.	Vertic -al	Active limit	Passive limit	Earth press.	Total earth press.	Adjusted soil modulus
		kN/m2	kN/m2	kN/m2	kN/m2	kN/m2	kN/m2	kN/m2
1	46.10	0.00	0.00	0.00	0.00	0.00	0.00	0.0
2	45.50	0.00	0.00	0.00	0.00	0.00	0.00	0.0
		0.00	0.00	0.00	10.58	10.58	10.58p	9999
3	44.50	0.00	21.35	4.04	91.98	21.58	21.58	9999
		0.00	21.35	0.15	107.85	35.24	35.24	19999

(continued)

Stage No.15 Remove strut or anchor no.2 at elevation 39.00

		RIGHT side						
			Effective stresses				Total	Adjusted
Node no.	Y coord	Water press.	Vertic -al	Active limit	Passive limit	Earth press.	earth press.	soil modulus
		kN/m2	kN/m2	kN/m2	kN/m2	kN/m2	kN/m2	kN/m2
4	43.75	0.00	35.06	4.41	160.12	30.50	30.50	19999
5	43.00	0.00	48.56	8.60	211.57	26.90	26.90	19999
6	42.50	0.00	57.50	11.37	245.65	20.91	20.91	19999
7	41.50	0.00	75.30	16.90	313.53	25.99	25.99	19999
		0.00	75.30	15.27	351.35	24.75	24.75	19999
8	41.10	0.00	82.41	17.30	381.82	26.83	26.83	19999
9	40.55	0.00	92.18	20.08	423.69	29.30	29.30	19999
10	40.00	0.00	101.94	22.87	465.56	31.02	31.02	19999
11	39.00	0.00	119.70	27.93	541.72	36.01	36.01	19999
12	38.60	0.00	126.82	29.96	572.21	38.34	38.34	19999
13	38.00	6.00	131.49	31.29	592.25	39.71	45.71	19999
14	37.00	16.00	139.30	33.52	625.73	41.64	57.64	19999
		16.00	139.30	20.88	888.58	33.81	49.81	49997
15	36.10	25.00	147.24	22.70	935.30	35.56	60.56	49997
16	35.10	35.00	156.09	24.72	987.31	33.91	68.91	49997
17	34.55	40.50	160.96	25.84	1015.96	27.94	68.44	49997
18	34.00	46.00	165.84	26.95	1044.63	28.10	74.10	49997
19	33.00	56.00	174.72	28.98	1096.82	29.93	85.93	49997
20	32.00	66.00	183.61	31.02	1149.06	44.32	110.32	49997
		66.00	183.61	0.00	1977.89	3.03	69.03	149992
21	31.00	76.00	193.50	0.00	2060.78	7.72	83.72	149992
22	30.00	86.00	203.40	0.00	2143.72	96.33	182.33	149992
23	29.90	87.00	204.39	0.00	2152.02	35.18	122.18	149992
24	29.70	89.00	206.37	0.00	2168.62	32.11	121.11	149992
25	26.85	117.50	234.62	0.00	2405.26	36.92	154.42	149992
26	24.00	146.00	262.89	0.00	2642.14	43.46	189.46	149992
27	20.00	186.00	302.62	6.35	2974.95	57.24	243.24	149992

Legend: 12.34 a Soil pressure at active limit
10.58 p Soil pressure at passive limit

Units: kN,m

Stage No.15 Remove prop no.2 at elev. 39.00

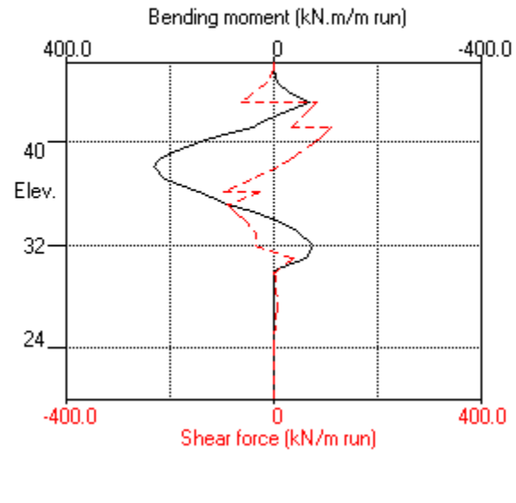

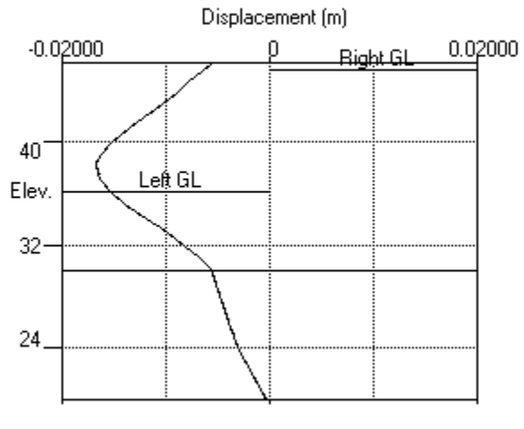

Stage No.15 Remove prop no.2 at elev. 39.00

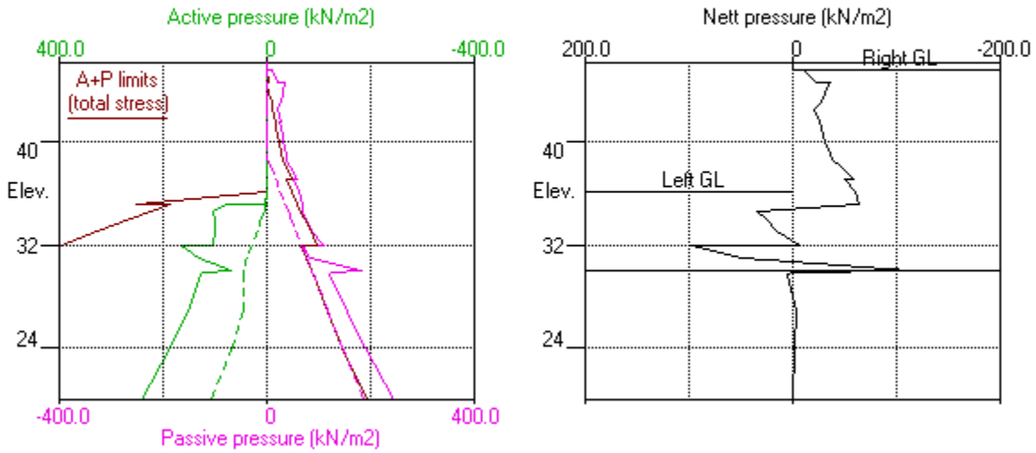

Units: kN,m

Stage No.17 Remove prop no.1 at elev. 43.00

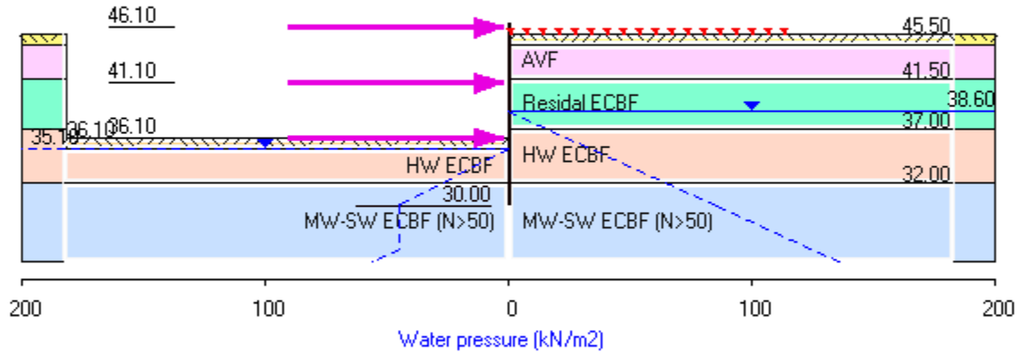

TONKIN + TAYLOR LTD | Sheet No.
Program: WALLAP Version 6.09 Revision A61.B78.R61 | Job No.
Licensed from GEOSOLVE | Made by :
Data filename/Run ID: 20261027_UoA_Section1_Anc_DeflectionEnvelope
New data set - contains default parameters | Date:28-10-2026
Please modify / add | Checked :

Units: kN,m

Stage No. 17 Remove strut or anchor no.1 at elevation 43.00

STABILITY ANALYSIS of Fully Embedded Wall according to Strength Factor method
Factor of safety on soil strength

Stage No.	Ground level Act.	Prop Pass.	FoS for toe elev. = 30.00 Factor of Safety	Moment equilib. at elev.	Toe elev. for FoS = 1.500 Toe elev.	Wall Penetr -ation	Direction of failure
17	36.10	45.50	More than one prop. No FoS calc.				

BENDING MOMENT and DISPLACEMENT ANALYSIS of Fully Embedded Wall
Analysis options
2-D finite element model. Active limit arching modelled.
Soil deformations are elastic until the active or passive limit is reached
Open Tension Crack analysis - No

Length of wall perpendicular to section = 1000.00m
Rigid boundaries: Left side 40.00m from wall Rough
Right side 40.00m from wall Rough
Lower boundary at elevation 20.00m Rough
Soil-wall interface Smooth

*** Wall displacements reset to zero at stage 3

Node no.	Y coord	Nett pressure kN/m2	Wall disp. m	Wall rotation rad.	Shear force kN/m	Bending moment kN.m/m	Prop forces kN/m	EI of wall kN.m2/m
1	46.10	0.00	-0.006	1.96E-03	39.5	0.0	39.5	291880
2	45.50	0.00	-0.007	1.94E-03	39.5	23.7		291880
		-10.58	-0.007	1.94E-03	39.5	23.7		
3	44.50	-21.06	-0.009	1.80E-03	23.7	56.1		291880
		-34.20	-0.009	1.80E-03	23.7	56.1		
4	43.75	-25.99	-0.010	1.65E-03	1.1	63.5		291880
5	43.00	-21.27	-0.011	1.50E-03	-16.6	56.3		291880
6	42.50	-16.70	-0.012	1.41E-03	-26.1	45.2		291880
7	41.50	-24.07	-0.013	1.33E-03	-46.5	8.3		291880
		-22.82	-0.013	1.33E-03	-46.5	8.3		
8	41.10	-26.93	-0.014	1.34E-03	-56.5	-12.2	180.7	291880
		-26.93	-0.014	1.34E-03	124.3	-12.2		
9	40.55	-30.17	-0.015	1.32E-03	108.6	51.7		291880
10	40.00	-32.35	-0.015	1.18E-03	91.4	106.6		291880
11	39.00	-37.43	-0.016	7.01E-04	56.5	180.3		291880
12	38.60	-39.71	-0.017	4.44E-04	41.1	199.8		291880
13	38.00	-46.94	-0.017	1.76E-05	15.1	216.8		291880
14	37.00	-58.37	-0.016	-7.09E-04	-37.6	204.3		291880
				-51.64	-0.016	-7.09E-04	-37.6	204.3		
15	36.10			-61.38	-0.015	-1.26E-03	-88.5	148.4	62.0	291880
				-61.38	-0.015	-1.26E-03	-26.5	148.4		
16	35.10			-65.00	-0.014	-1.69E-03	-89.7	90.7		291880
				6.79	-0.014	-1.69E-03	-89.7	90.7		
17	34.55			35.29	-0.013	-1.82E-03	-78.1	42.4		291880
18	34.00			26.27	-0.012	-1.88E-03	-61.2	4.7		291880
19	33.00			15.26	-0.010	-1.82E-03	-40.4	-43.4		291880
20	32.00			-6.83	-0.008	-1.63E-03	-36.2	-76.3		291880
				98.41	-0.008	-1.63E-03	-36.2	-76.3		
21	31.00			49.64	-0.007	-1.40E-03	37.8	-62.5		291880
22	30.00			-113.91	-0.006	-1.29E-03	5.7	-0.0		0

Run ID. 20261027_UoA_Section1_Anc_DeflectionEnvelope | Sheet No.
New data set - contains default parameters | Date:28-10-2026
Please modify / add | Checked :

(continued)

Stage No.17 Remove strut or anchor no.1 at elevation 43.00

Node no.	Y coord	Nett pressure	Wall disp.	Wall rotation	Shear force	Bending moment	Prop forces	EI of wall
		kN/m2	m	rad.	kN/m	kN.m/m	kN/m	kN.m2/m
23	29.90	0.22	-0.006	0	0.0	0.0		0
24	29.70	5.81	-0.006	0	0.6	0.0		0
25	26.85	-2.35	-0.004	0	5.5	0.0		0
26	24.00	-0.79	-0.003	0	1.1	0.0		0
27	20.00	0.27	-0.000	0	-0.0	0.0		---

At elev. 46.10 Prop force = 39.5 kN/m run
At elev. 41.10 Prop force = 180.7 kN/m run
At elev. 36.10 Prop force = 62.0 kN/m run

		LEFT side						
			Effective stresses				Total	Adjusted
Node no.	Y coord	Water press.	Vertic -al	Active limit	Passive limit	Earth press.	earth press.	soil modulus
		kN/m2	kN/m2	kN/m2	kN/m2	kN/m2	kN/m2	kN/m2
1	46.10	0.00	0.00	0.00	0.00	0.00	0.00	0.0
2	45.50	0.00	0.00	0.00	0.00	0.00	0.00	0.0
3	44.50	0.00	0.00	0.00	0.00	0.00	0.00	0.0
4	43.75	0.00	0.00	0.00	0.00	0.00	0.00	0.0
5	43.00	0.00	0.00	0.00	0.00	0.00	0.00	0.0
6	42.50	0.00	0.00	0.00	0.00	0.00	0.00	0.0
7	41.50	0.00	0.00	0.00	0.00	0.00	0.00	0.0
8	41.10	0.00	0.00	0.00	0.00	0.00	0.00	0.0
9	40.55	0.00	0.00	0.00	0.00	0.00	0.00	0.0
10	40.00	0.00	0.00	0.00	0.00	0.00	0.00	0.0
11	39.00	0.00	0.00	0.00	0.00	0.00	0.00	0.0
12	38.60	0.00	0.00	0.00	0.00	0.00	0.00	0.0
13	38.00	0.00	0.00	0.00	0.00	0.00	0.00	0.0
14	37.00	0.00	0.00	0.00	0.00	0.00	0.00	0.0
15	36.10	0.00	0.00	0.00	0.00	0.00	0.00	0.0
		0.00	0.00	0.00	0.00	0.00	0.00	149995
16	35.10	0.00	20.00	2.86	251.35	4.32	4.32	149995
		0.00	20.00	0.00	187.26	76.12	76.12	49998
17	34.55	4.95	25.50	0.00	219.61	99.02	103.97	49998
18	34.00	9.90	31.01	0.00	251.98	90.62	100.52	49998
19	33.00	18.90	41.03	0.00	310.90	82.42	101.32	49998
20	32.00	27.90	51.08	0.68	369.95	75.65	103.55	49998
		27.90	51.08	0.00	867.56	139.70	167.60	149995
21	31.00	36.90	62.15	0.00	960.30	96.48	133.38	149995
22	30.00	45.00	74.15	0.00	1060.85	23.34	68.34	149995
23	29.90	45.00	76.16	0.00	1077.70	77.47	122.47	149995
24	29.70	45.00	80.19	0.00	1111.43	81.97	126.97	149995
25	26.85	45.00	137.73	0.00	1593.57	107.10	152.10	149995
26	24.00	66.00	174.69	0.00	1903.17	122.69	188.69	149995
27	20.00	106.00	216.81	0.00	2256.03	137.55	243.55	149995

		RIGHT side						
			Effective stresses				Total	Adjusted
Node no.	Y coord	Water press.	Vertic -al	Active limit	Passive limit	Earth press.	earth press.	soil modulus
		kN/m2	kN/m2	kN/m2	kN/m2	kN/m2	kN/m2	kN/m2
1	46.10	0.00	0.00	0.00	0.00	0.00	0.00	0.0
2	45.50	0.00	0.00	0.00	0.00	0.00	0.00	0.0
		0.00	0.00	0.00	10.58	10.58	10.58p	9999
3	44.50	0.00	21.35	4.04	91.98	21.06	21.06	9999
		0.00	21.35	0.15	107.85	34.20	34.20	19999
4	43.75	0.00	35.06	4.41	160.12	25.99	25.99	19999

(continued)

Stage No.17 Remove strut or anchor no.1 at elevation 43.00

		RIGHT side						
			Effective stresses				Total	Adjusted
Node no.	Y coord	Water press.	Vertic -al	Active limit	Passive limit	Earth press.	earth press.	soil modulus
		kN/m2	kN/m2	kN/m2	kN/m2	kN/m2	kN/m2	kN/m2
5	43.00	0.00	48.56	8.60	211.57	21.27	21.27	19999
6	42.50	0.00	57.50	11.37	245.65	16.70	16.70	19999
7	41.50	0.00	75.30	16.90	313.53	24.07	24.07	19999
		0.00	75.30	15.27	351.35	22.82	22.82	19999
8	41.10	0.00	82.41	17.30	381.82	26.93	26.93	19999
9	40.55	0.00	92.18	20.08	423.69	30.17	30.17	19999
10	40.00	0.00	101.94	22.87	465.56	32.35	32.35	19999
11	39.00	0.00	119.70	27.93	541.72	37.43	37.43	19999
12	38.60	0.00	126.82	29.96	572.21	39.71	39.71	19999
13	38.00	6.00	131.49	31.29	592.25	40.94	46.94	19999
14	37.00	16.00	139.30	33.52	625.73	42.37	58.37	19999
		16.00	139.30	20.88	888.58	35.64	51.64	49997
15	36.10	25.00	147.24	22.70	935.30	36.38	61.38	49997
16	35.10	35.00	156.09	24.72	987.31	34.33	69.33	49997
17	34.55	40.50	160.96	25.84	1015.96	28.17	68.67	49997
18	34.00	46.00	165.84	26.95	1044.63	28.25	74.25	49997
19	33.00	56.00	174.72	28.98	1096.82	30.06	86.06	49997
20	32.00	66.00	183.61	31.02	1149.06	44.38	110.38	49997
		66.00	183.61	0.00	1977.89	3.19	69.19	149992
21	31.00	76.00	193.50	0.00	2060.78	7.74	83.74	149992
22	30.00	86.00	203.40	0.00	2143.72	96.25	182.25	149992
23	29.90	87.00	204.39	0.00	2152.02	35.25	122.25	149992
24	29.70	89.00	206.37	0.00	2168.62	32.16	121.16	149992
25	26.85	117.50	234.62	0.00	2405.26	36.95	154.45	149992
26	24.00	146.00	262.89	0.00	2642.14	43.49	189.49	149992
27	20.00	186.00	302.62	6.35	2974.95	57.29	243.29	149992

Legend: 12.34 a Soil pressure at active limit
10.58 p Soil pressure at passive limit

Units: kN,m

Stage No.17 Remove prop no.1 at elev. 43.00

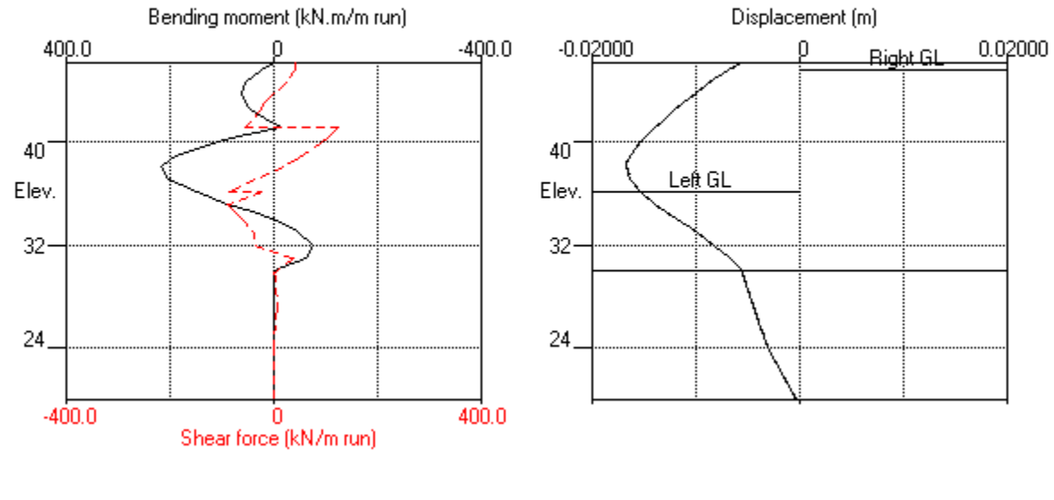

Stage No.17 Remove prop no.1 at elev. 43.00

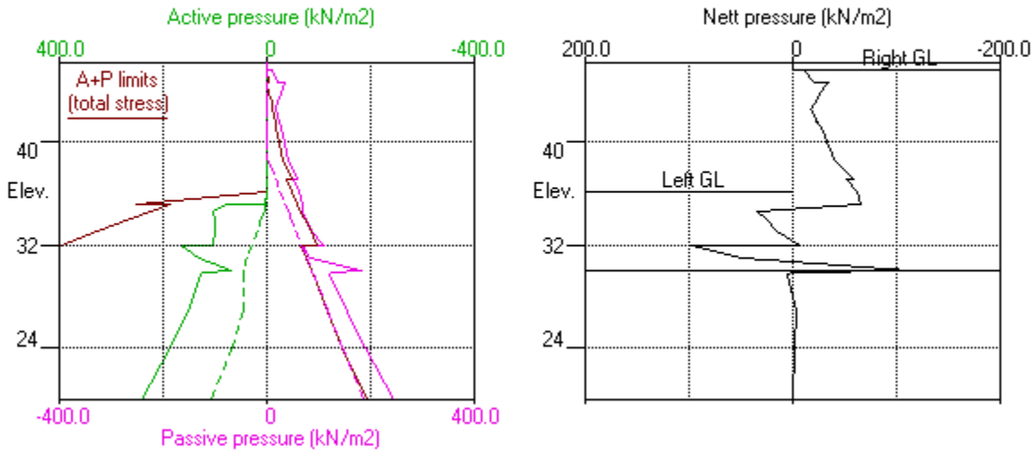

Units: kN,m

Stage No.18 Change EI of wall to 194590kN.m2/m run

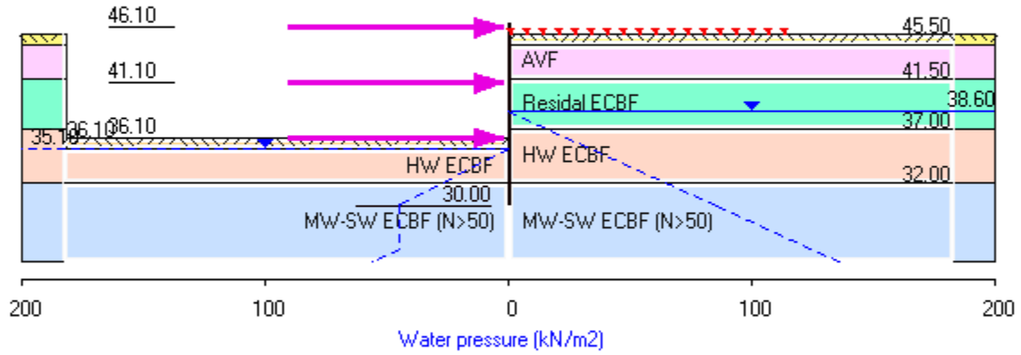

TONKIN + TAYLOR LTD | Sheet No.
Program: WALLAP Version 6.09 Revision A61.B78.R61 | Job No.
Licensed from GEOSOLVE | Made by :
Data filename/Run ID: 20261027_UoA_Section1_Anc_DeflectionEnvelope
New data set - contains default parameters | Date:28-10-2026
Please modify / add | Checked :

Units: kN,m

Stage No. 18 Change EI of wall to 194590 kN.m2/m run
Allow wall to relax with new modulus value

STABILITY ANALYSIS of Fully Embedded Wall according to Strength Factor method
Factor of safety on soil strength

Stage No.	Ground level Act.	Ground level Pass.	Prop Elev.	FoS for toe elev. = 30.00 Factor of Safety	Moment equilib. at elev.	Toe elev. for FoS = 1.500 Toe elev.	Wall Penetr -ation	Direction of failure
18	36.10	45.50	More than one prop. No FoS calc.					

BENDING MOMENT and DISPLACEMENT ANALYSIS of Fully Embedded Wall
Analysis options
2-D finite element model. Active limit arching modelled.
Soil deformations are elastic until the active or passive limit is reached
Open Tension Crack analysis - No

Length of wall perpendicular to section = 1000.00m
Rigid boundaries: Left side 40.00m from wall Rough
Right side 40.00m from wall Rough
Lower boundary at elevation 20.00m Rough
Soil-wall interface Smooth

*** Wall displacements reset to zero at stage 3

Node no.	Y coord	Nett pressure kN/m2	Wall disp. m	Wall rotation rad.	Shear force kN/m	Bending moment kN.m/m	Prop forces kN/m	EI of wall kN.m2/m
1	46.10	0.00	-0.006	2.03E-03	34.6	0.0	34.6	194590
2	45.50	0.00	-0.007	1.99E-03	34.6	21.5		194590
		-10.58	-0.007	1.99E-03	34.6	21.5		
3	44.50	-20.94	-0.009	1.82E-03	18.8	50.2		194590
		-33.95	-0.009	1.82E-03	18.8	50.2		
4	43.75	-25.65	-0.010	1.63E-03	-3.5	54.8		194590
5	43.00	-21.22	-0.011	1.45E-03	-21.1	44.8		194590
6	42.50	-17.16	-0.012	1.37E-03	-30.7	31.8		194590
7	41.50	-24.99	-0.013	1.35E-03	-51.8	-9.1		194590
		-23.75	-0.013	1.35E-03	-51.8	-9.1		
8	41.10	-27.94	-0.014	1.41E-03	-62.1	-31.3	178.1	194590
		-27.94	-0.014	1.41E-03	116.0	-31.3		
9	40.55	-30.64	-0.015	1.44E-03	99.9	29.1		194590
10	40.00	-31.84	-0.016	1.32E-03	82.7	80.4		194590
11	39.00	-36.06	-0.017	7.95E-04	48.7	148.2		194590
12	38.60	-37.75	-0.017	4.99E-04	34.0	165.7		194590
13	38.00	-44.81	-0.017	3.71E-06	9.2	180.2		194590
14	37.00	-56.76	-0.017	-8.24E-04	-41.6	165.0		194590
		-47.61	-0.017	-8.24E-04	-41.6	165.0		
15	36.10	-59.89	-0.016	-1.40E-03	-90.0	108.0	82.9	194590
		-59.89	-0.016	-1.40E-03	-7.1	108.0		
16	35.10	-63.87	-0.014	-1.81E-03	-69.0	65.4		194590
		6.99	-0.014	-1.81E-03	-69.0	65.4		
17	34.55	32.38	-0.013	-1.93E-03	-58.2	25.6		194590
18	34.00	21.63	-0.012	-1.95E-03	-43.3	-4.3		194590
19	33.00	9.38	-0.010	-1.85E-03	-27.8	-41.0		194590
20	32.00	-12.46	-0.008	-1.59E-03	-29.3	-66.7		194590
		81.51	-0.008	-1.59E-03	-29.3	-66.7		
21	31.00	41.10	-0.007	-1.30E-03	32.0	-54.5		194590

Run ID. 20261027_UoA_Section1_Anc_DeflectionEnvelope | Sheet No.
New data set - contains default parameters | Date:28-10-2026
Please modify / add | Checked :

(continued)

Stage No.18 Change EI of wall to 194590 kN.m2/m run
Allow wall to relax with new modulus value

Node no.	Y coord	Nett pressure	Wall disp.	Wall rotation	Shear force	Bending moment	Prop forces	EI of wall
		kN/m2	m	rad.	kN/m	kN.m/m	kN/m	kN.m2/m
22	30.00	-95.47	-0.006	-1.17E-03	4.8	-0.0		0
23	29.90	0.22	-0.006	0	0.0	0.0		0
24	29.70	5.81	-0.005	0	0.6	0.0		0
25	26.85	-2.35	-0.004	0	5.5	0.0		0
26	24.00	-0.79	-0.003	0	1.1	0.0		0
27	20.00	0.27	-0.000	0	-0.0	0.0		---

At elev. 46.10 Prop force = 34.6 kN/m run
At elev. 41.10 Prop force = 178.1 kN/m run
At elev. 36.10 Prop force = 82.9 kN/m run

LEFT side

Node no.	Y coord	Effective stresses: Water press.	Vertic -al	Active limit	Passive limit	Earth press.	Total earth press.	Adjusted soil modulus
		kN/m2	kN/m2	kN/m2	kN/m2	kN/m2	kN/m2	kN/m2
1	46.10	0.00	0.00	0.00	0.00	0.00	0.00	0.0
2	45.50	0.00	0.00	0.00	0.00	0.00	0.00	0.0
3	44.50	0.00	0.00	0.00	0.00	0.00	0.00	0.0
4	43.75	0.00	0.00	0.00	0.00	0.00	0.00	0.0
5	43.00	0.00	0.00	0.00	0.00	0.00	0.00	0.0
6	42.50	0.00	0.00	0.00	0.00	0.00	0.00	0.0
7	41.50	0.00	0.00	0.00	0.00	0.00	0.00	0.0
8	41.10	0.00	0.00	0.00	0.00	0.00	0.00	0.0
9	40.55	0.00	0.00	0.00	0.00	0.00	0.00	0.0
10	40.00	0.00	0.00	0.00	0.00	0.00	0.00	0.0
11	39.00	0.00	0.00	0.00	0.00	0.00	0.00	0.0
12	38.60	0.00	0.00	0.00	0.00	0.00	0.00	0.0
13	38.00	0.00	0.00	0.00	0.00	0.00	0.00	0.0
14	37.00	0.00	0.00	0.00	0.00	0.00	0.00	0.0
15	36.10	0.00	0.00	0.00	0.00	0.00	0.00	0.0
		0.00	0.00	0.00	0.00	0.00	0.00	149995
16	35.10	0.00	20.00	2.86	251.35	5.73	5.73	149995
		0.00	20.00	0.00	187.26	76.59	76.59	49998
17	34.55	4.95	25.50	0.00	219.61	97.63	102.58	49998
18	34.00	9.90	31.01	0.00	251.98	88.40	98.30	49998
19	33.00	18.90	41.03	0.00	310.90	79.56	98.46	49998
20	32.00	27.90	51.08	0.68	369.95	72.87	100.77	49998
		27.90	51.08	0.00	867.56	131.37	159.27	149995
21	31.00	36.90	62.15	0.00	960.30	92.30	129.20	149995
22	30.00	45.00	74.15	0.00	1060.85	32.63	77.63	149995
23	29.90	45.00	76.16	0.00	1077.70	77.53	122.53	149995
24	29.70	45.00	80.19	0.00	1111.43	82.01	127.01	149995
25	26.85	45.00	137.73	0.00	1593.57	107.12	152.12	149995
26	24.00	66.00	174.69	0.00	1903.17	122.71	188.71	149995
27	20.00	106.00	216.81	0.00	2256.03	137.57	243.57	149995

RIGHT side

Node no.	Y coord	Effective stresses: Water press.	Vertic -al	Active limit	Passive limit	Earth press.	Total earth press.	Adjusted soil modulus
		kN/m2	kN/m2	kN/m2	kN/m2	kN/m2	kN/m2	kN/m2
1	46.10	0.00	0.00	0.00	0.00	0.00	0.00	0.0
2	45.50	0.00	0.00	0.00	0.00	0.00	0.00	0.0
		0.00	0.00	0.00	10.58	10.58	10.58p	9999
3	44.50	0.00	21.35	4.04	91.98	20.94	20.94	9999
		0.00	21.35	0.15	107.85	33.95	33.95	19999

(continued)

Stage No.18 Change EI of wall to 194590 kN.m2/m run
Allow wall to relax with new modulus value

		RIGHT side						
			Effective stresses				Total	Adjusted
Node no.	Y coord	Water press.	Vertic -al	Active limit	Passive limit	Earth press.	earth press.	soil modulus
		kN/m2	kN/m2	kN/m2	kN/m2	kN/m2	kN/m2	kN/m2
4	43.75	0.00	35.06	4.41	160.12	25.65	25.65	19999
5	43.00	0.00	48.56	8.60	211.57	21.22	21.22	19999
6	42.50	0.00	57.50	11.37	245.65	17.16	17.16	19999
7	41.50	0.00	75.30	16.90	313.53	24.99	24.99	19999
		0.00	75.30	15.27	351.35	23.75	23.75	19999
8	41.10	0.00	82.41	17.30	381.82	27.94	27.94	19999
9	40.55	0.00	92.18	20.08	423.69	30.64	30.64	19999
10	40.00	0.00	101.94	22.87	465.56	31.84	31.84	19999
11	39.00	0.00	119.70	27.93	541.72	36.06	36.06	19999
12	38.60	0.00	126.82	29.96	572.21	37.75	37.75	19999
13	38.00	6.00	131.49	31.29	592.25	38.81	44.81	19999
14	37.00	16.00	139.30	33.52	625.73	40.76	56.76	19999
		16.00	139.30	20.88	888.58	31.61	47.61	49997
15	36.10	25.00	147.24	22.70	935.30	34.89	59.89	49997
16	35.10	35.00	156.09	24.72	987.31	34.60	69.60	49997
17	34.55	40.50	160.96	25.84	1015.96	29.71	70.21	49997
18	34.00	46.00	165.84	26.95	1044.63	30.67	76.67	49997
19	33.00	56.00	174.72	28.98	1096.82	33.08	89.08	49997
20	32.00	66.00	183.61	31.02	1149.06	47.24	113.24	49997
		66.00	183.61	0.00	1977.89	11.77	77.77	149992
21	31.00	76.00	193.50	0.00	2060.78	12.09	88.09	149992
22	30.00	86.00	203.40	0.00	2143.72	87.09	173.09	149992
23	29.90	87.00	204.39	0.00	2152.02	35.31	122.31	149992
24	29.70	89.00	206.37	0.00	2168.62	32.21	121.21	149992
25	26.85	117.50	234.62	0.00	2405.26	36.98	154.48	149992
26	24.00	146.00	262.89	0.00	2642.14	43.50	189.50	149992
27	20.00	186.00	302.62	6.35	2974.95	57.30	243.30	149992

Legend: 12.34 a Soil pressure at active limit
10.58 p Soil pressure at passive limit

Units: kN,m

Stage No.18 Change EI of wall to 194590kN.m2/m run

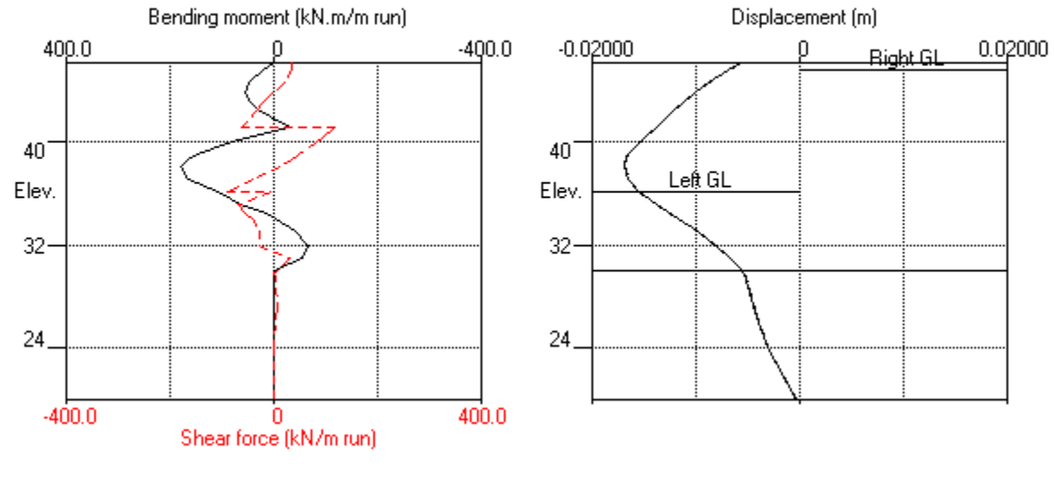

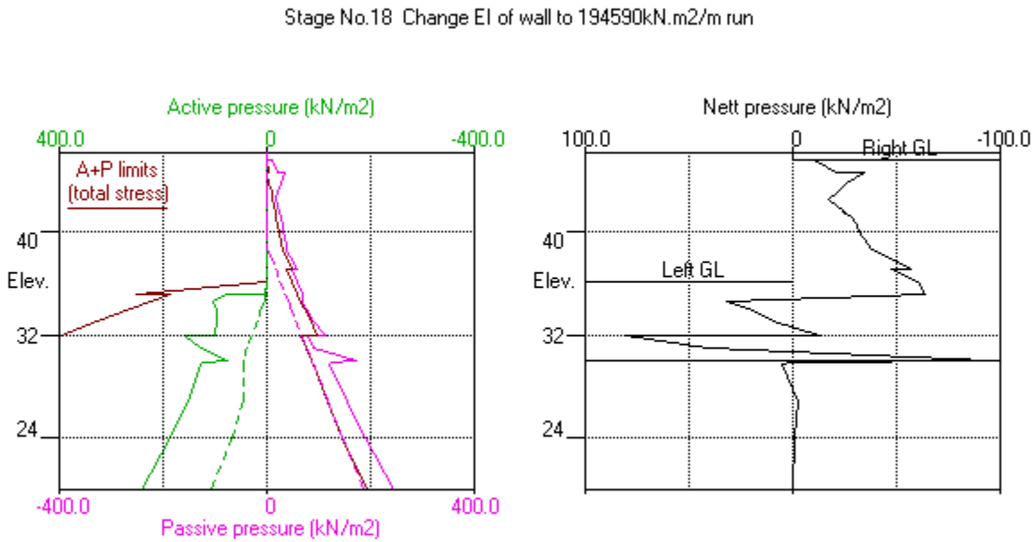

Units: kN,m

Summary of results

STABILITY ANALYSIS of Fully Embedded Wall according to Strength Factor method
Factor of safety on soil strength

Stage No.	Ground level Act.	Pass.	Prop Elev.	FoS for toe elev. = 30.00 Factor of Safety	Moment equilib. at elev.	Toe elev. for FoS = 1.500 Toe elev.	Wall Penetr -ation	Direction of failure
1	45.50	45.50	Cant.	Conditions not suitable for FoS calc.				
2	45.50	45.50	Cant.	Conditions not suitable for FoS calc.				
3	45.50	45.50	No analysis at this stage					
4	45.50	42.50	Cant.	3.302	31.27	37.79	4.71	R to L
5	45.50	42.50	43.00	Conditions not suitable for FoS calc.				
6	42.50	45.50	No analysis at this stage					
7	45.50	38.00	43.00	3.272	n/a	33.97	4.03	R to L
8	38.00	45.50	More than one prop. No FoS calc.					

All remaining stages have more than one prop - FoS calculation n/a

Minimum required Anchor Free Lengths
This additional information would be given here if the Wedge Analysis option had been selected.

Units: kN,m

Summary of results

BENDING MOMENT and DISPLACEMENT ANALYSIS of Fully Embedded Wall

Analysis options

2-D finite element model. Active limit arching modelled.
Soil deformations are elastic until the active or passive limit is reached
Open Tension Crack analysis - No

Length of wall perpendicular to section = 1000.00m
Rigid boundaries: Left side 40.00m from wall Rough
Right side 40.00m from wall Rough
Lower boundary at elevation 20.00m Rough
Soil-wall interface Smooth

Bending moment, shear force and displacement envelopes

Node no.	Y coord	Displacement maximum	Displacement minimum	Bending moment maximum	Bending moment minimum	Shear force maximum	Shear force minimum
		m	m	kN.m/m	kN.m/m	kN/m	kN/m
1	46.10	0.000	-0.014	0.0	-0.0	39.5	0.0
2	45.50	0.000	-0.013	23.7	-0.0	39.5	0.0
3	44.50	0.000	-0.012	56.1	-7.1	23.7	-16.1
4	43.75	0.000	-0.012	63.5	-29.8	1.1	-40.7
5	43.00	0.000	-0.013	56.3	-69.6	102.5	-62.3
6	42.50	0.000	-0.014	45.2	-32.7	94.2	-30.7
7	41.50	0.000	-0.016	80.0	-23.1	74.0	-51.8
8	41.10	0.000	-0.016	107.6	-31.3	124.3	-62.1
9	40.55	0.000	-0.017	139.1	-22.9	108.6	-0.2
10	40.00	0.000	-0.017	161.7	-21.5	91.4	-4.9
11	39.00	0.000	-0.018	205.8	-19.9	117.8	-57.4
12	38.60	0.000	-0.018	220.9	-20.4	96.1	-28.2
13	38.00	0.000	-0.018	231.8	-23.2	67.3	-61.9
14	37.00	0.000	-0.018	233.8	-33.5	11.5	-89.5
15	36.10	0.000	-0.017	199.1	-38.5	0.0	-96.1
16	35.10	0.000	-0.015	121.8	-33.9	7.1	-114.9
17	34.55	0.000	-0.013	68.5	-43.2	8.1	-97.7
18	34.00	0.000	-0.012	25.4	-47.9	7.3	-76.6
19	33.00	0.000	-0.010	0.0	-64.7	2.8	-52.6
20	32.00	0.000	-0.008	0.0	-100.5	0.6	-44.8
21	31.00	0.000	-0.007	0.0	-74.7	49.3	0.0
22	30.00	0.000	-0.006	0.0	-0.0	6.7	0.0
23	29.90	0.000	-0.006	0.0	0.0	0.0	-0.0
24	29.70	0.000	-0.006	0.0	0.0	0.6	-0.0
25	26.85	0.000	-0.004	0.0	0.0	5.5	-3.5
26	24.00	0.000	-0.003	0.0	0.0	1.1	-9.8
27	20.00	0.000	-0.000	0.0	0.0	0.0	-0.0

Run ID. 20261027_UoA_Section1_Anc_DeflectionEnvelope | Sheet No.
New data set - contains default parameters | Date:28-10-2026
Please modify / add | Checked :

Summary of results (continued)

Maximum and minimum bending moment and shear force at each stage

Stage no.	Bending moment maximum	Bending moment elev.	Bending moment minimum	Bending moment elev.	Shear force maximum	Shear force elev.	Shear force minimum	Shear force elev.
	kN.m/m		kN.m/m		kN/m		kN/m	
1	4.5	40.55	-2.8	35.10	1.9	42.50	-2.7	38.00
2	4.8	40.55	-5.1	35.10	2.1	42.50	-3.5	38.00
3	No calculation at this stage							
4	0.0	45.50	-38.5	36.10	9.3	31.00	-14.6	37.00
5	46.0	39.00	-58.5	43.00	71.1	43.00	-54.1	43.00
6	No calculation at this stage							
7	174.6	39.00	-58.1	32.00	102.5	43.00	-89.5	37.00
8	96.1	38.00	-54.0	43.00	90.0	43.00	-57.4	39.00
9	No calculation at this stage							
10	199.8	37.00	-77.8	32.00	109.9	39.00	-95.4	35.10
11	233.8	37.00	-100.5	32.00	117.8	39.00	-114.9	35.10
12	208.9	37.00	-74.2	32.00	113.5	39.00	-104.4	35.10
13	No calculation at this stage							
14	No calculation at this stage							
15	231.8	38.00	-76.8	32.00	110.9	41.10	-96.1	36.10
16	No calculation at this stage							
17	216.8	38.00	-76.3	32.00	124.3	41.10	-89.7	35.10
18	180.2	38.00	-66.7	32.00	116.0	41.10	-90.0	36.10

Maximum and minimum displacement at each stage

Stage no.	Displacement maximum	Displacement elev.	Displacement minimum	Displacement elev.	Stage description
	m		m		
1	0.000	46.10	-0.000	43.75	Apply surcharge no.1 at elev. 45.50
2	0.000	46.10	-0.001	46.10	Apply surcharge no.2 at elev. 45.50
3	Wall displacements reset to zero Change EI of wall to 291880kN.m2/m run				
4	0.000	46.10	-0.014	46.10	Excav. to elev. 42.50 on LEFT side
5	0.000	46.10	-0.003	38.60	Install prop no.1 at elev. 43.00
6	No calculation at this stage				Apply water pressure profile no.2
7	0.000	46.10	-0.013	40.00	Excav. to elev. 38.00 on LEFT side
8	0.000	46.10	-0.009	39.00	Install prop no.2 at elev. 39.00
9	No calculation at this stage				Apply water pressure profile no.1
10	0.000	46.10	-0.016	38.00	Excav. to elev. 35.10 on LEFT side
11	0.000	46.10	-0.018	38.00	Fill to elev. 36.10 on LEFT side
12	0.000	46.10	-0.016	38.00	Apply water pressure profile no.3
13	No calculation at this stage				Install prop no.4 at elev. 36.10
14	No calculation at this stage				Install prop no.3 at elev. 41.10
15	0.000	46.10	-0.017	38.00	Remove prop no.2 at elev. 39.00
16	No calculation at this stage				Install prop no.5 at elev. 46.10
17	0.000	46.10	-0.017	38.00	Remove prop no.1 at elev. 43.00
18	0.000	46.10	-0.017	38.00	Change EI of wall to 194590kN.m2/m run

Summary of results (continued)

Prop forces at each stage (horizontal components)

Stage no.	-- Anchor no. 1 --- at elev. 43.00 kN/m run	kN/prop	-- Anchor no. 2 --- at elev. 39.00 kN/m run	kN/prop	--- Strut no. 3 --- at elev. 41.10 kN/m run	kN/prop
5	125.22	601.04	---	---	---	---
7	145.19	696.94	---	---	---	---
8	137.38	659.43	125.22	601.04	---	---
10	144.76	694.83	143.69	689.72	---	---
11	150.13	720.65	152.00	729.61	---	---
12	143.91	690.77	143.78	690.16	---	---
15	143.09	686.84	---	---	75.78	75.78
17	---	---	---	---	180.73	180.73
18	---	---	---	---	178.09	178.09

Stage no.	--- Strut no. 4 --- at elev. 36.10 kN/m run	kN/prop	--- Strut no. 5 --- at elev. 46.10 kN/m run	kN/prop
15	68.87	68.87	---	---
17	61.99	61.99	39.48	39.48
18	82.85	82.85	34.59	34.59

Units: kN,m

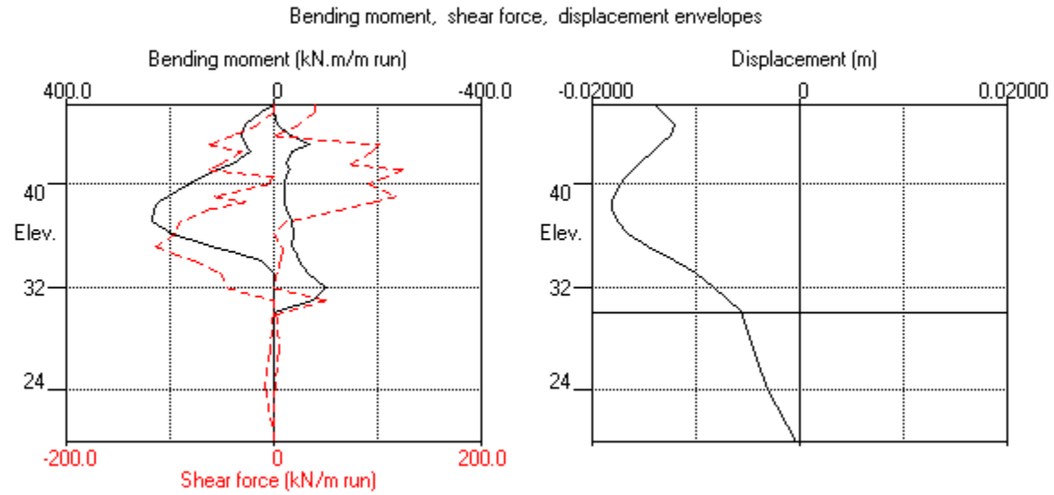

Units: kN,m

INPUT DATA

SOIL PROFILE

Stratum no.	Elevation of top of stratum	Soil types Left side	Right side
1	45.50	1 Fill	1 Fill
2	44.50	6 AVF	6 AVF
3	41.50	2 Residal ECBF	2 Residal ECBF
4	37.00	3 HW ECBF	3 HW ECBF
5	32.00	4 MW-SW ECBF (N>50)	4 MW-SW ECBF (N>50)

SOIL PROPERTIES

No.	Soil type Description (Datum elev.)	Bulk density kN/m3	Young's Modulus Eh,kN/m2 (dEh/dy)	At rest coeff. Ko (dKo/dy)	Consol state. NC/OC (Nu)	Active limit Ka (Kac)	Passive limit Kp (Kpc)	Cohesion kN/m2 (dc/dy)
1	Fill	17.00	10000	0.530 (0.300)	OC	0.311 (1.297)	3.812 (5.289)	2.000d
2	Residal ECBF	18.00	20000	0.500 (0.300)	OC	0.285 (1.238)	4.288 (5.694)	5.000d
3	HW ECBF	19.00	50000	0.430 (0.250)	OC	0.229 (1.101)	5.879 (6.968)	10.00d
4	MW-SW ECBF (N>50)	20.00	150000	0.360 (0.250)	OC	0.182 (0.975)	8.378 (8.793)	50.00d
5	Structural fill	20.00	150000	0.290 (0.200)	OC	0.143 (0.857)	12.57 (11.567)	0.0d
6	AVF	18.00	20000	0.530 (0.300)	OC	0.311 (1.297)	3.812 (5.289)	5.000d

Additional soil parameters associated with Ka and Kp

No.	Soil type Description	--- parameters for Ka --- Soil friction angle	Wall adhesion coeff.	Back-fill angle	--- parameters for Kp --- Soil friction angle	Wall adhesion coeff.	Back-fill angle
1	Fill	28.00	0.639	0.00	28.00	0.469	0.00
2	Residal ECBF	30.00	0.634	0.00	30.00	0.464	0.00
3	HW ECBF	35.00	0.619	0.00	35.00	0.450	0.00
4	MW-SW ECBF (N>50)	40.00	0.602	0.00	40.00	0.434	0.00
5	Structural fill	45.00	0.581	0.00	45.00	0.414	0.00
6	AVF	28.00	0.639	0.00	28.00	0.469	0.00

GROUND WATER CONDITIONS

Density of water = 10.00 kN/m3
Initial water pressure profile = Profile number 5

Automatic water pressure balancing at toe of wall : Yes

Water press. profile no.	Left side Point no.	Elev. m	Piezo elev. m	Water press. kN/m2	Right side Point no.	Elev. m	Piezo elev. m	Water press. kN/m2
1	1	35.10	35.10	0.0	1	43.00	43.00	0.0
	2	30.10	34.60	45.0	2	38.50	43.00	45.0
	3	26.10	30.60	45.0	3	26.00	30.50	45.0
2	Not defined							
3	1	35.60	35.60	0.0	1	38.60	38.60	0.0
	2	30.60	35.10	45.0				
	3	26.00	30.50	45.0				
4	Not defined							
5	1	42.50	42.50	0.0	1	43.00	43.00	0.0
	2	38.00	42.50	45.0	2	38.50	43.00	45.0
	3	26.00	30.50	45.0	3	26.00	30.50	45.0

WALL PROPERTIES

Type of structure = Fully Embedded Wall
Elevation of toe of wall = 30.00
Maximum finite element length = 1.00 m
Youngs modulus of wall E = 10000 kN/m2
Moment of inertia of wall I = 1.0000 m4/m run
E.I = 10000 kN.m2/m run
Yield Moment of wall = Not defined

STRUTS and ANCHORS

Prop no.	Elev.	Prop spacing m	Cross-section area sq.m	Youngs modulus kN/m2	Free length m	Inclination (degs)	Pre-stress /prop kN	Strut or Anchor	Allow tension ?	L/R
1	43.00	4.80	0.020100	2.000E+08	18.50	-25.00	0	Strut	No	L
2	39.00	4.80	0.020100	2.000E+08	10.00	-25.00	0	Strut	No	L
3	41.10	1.00	0.150000	3.000E+07	20.00	0.00	0	Strut	No	L
4	36.10	1.00	0.150000	3.000E+07	20.00	0.00	0	Strut	No	L
5	46.10	1.00	0.150000	3.000E+07	20.00	0.00	0	Strut	No	L

SURCHARGE LOADS

Surcharge no.	Elev.	Distance from wall	Length parallel to wall	Width perpend. to wall	Surcharge(kN/m2) Near edge	Far edge	Soil Cat.	Soil type	Part fact.	Short Q reduc. fact.
1	45.50	-9.00(R)	10.00	15.00	12.00	=	--	--	--	--
2	45.50	-0.10(R)	10.00	8.90	5.00	=	--	--	--	--

Note: L = Left side, R = Right side

CONSTRUCTION STAGES

Construction stage no.	Stage description
1	Apply surcharge no.1 at elevation 45.50
2	Apply surcharge no.2 at elevation 45.50
3	Change EI of wall to 291880 kN.m2/m run Reset wall displacements to zero at this stage
4	Apply water pressure profile no.1 No analysis at this stage
5	Excavate to elevation 42.50 on LEFT side Toe of berm at elevation 35.10 Width of top of berm = 1.00 Width of toe of berm = 15.80
6	Install strut or anchor no.1 at elevation 43.00
7	Excavate to elevation 38.50 on LEFT side Toe of berm at elevation 35.10 Width of top of berm = 1.00 Width of toe of berm = 7.80
8	Install strut or anchor no.2 at elevation 39.00
9	Excavate to elevation 35.10 on LEFT side
10	Fill to elevation 36.10 on LEFT side with soil type 5
11	Apply water pressure profile no.3 No analysis at this stage
12	Install strut or anchor no.4 at elevation 36.10
13	Install strut or anchor no.3 at elevation 41.10
14	Remove strut or anchor no.2 at elevation 39.00
15	Install strut or anchor no.5 at elevation 46.10
16	Remove strut or anchor no.1 at elevation 43.00
17	Change EI of wall to 194590 kN.m2/m run Allow wall to relax with new modulus value

FACTORS OF SAFETY and ANALYSIS OPTIONS

Stability analysis:
 Method of analysis - Strength Factor method
 Factor on soil strength for calculating wall depth = 1.50

Parameters for undrained strata:
 Minimum equivalent fluid density = 5.00 kN/m3
 Maximum depth of water filled tension crack = 0.00 m

Bending moment and displacement calculation:
 Method - 2-D finite element model
 Open Tension Crack analysis? - No
 Active limit arching modelled? - Yes
 Non-linear Modulus Parameter (L) = 15.50 m

Boundary conditions:
 Length of wall (normal to plane of analysis) = 1000.00 m

 Width of excavation/fill on Left side of wall = 40.00 m
 Width of excavation/fill on Right side of wall = 40.00 m

 Distance to rigid boundary on Left side = 40.00 m
 Distance to rigid boundary on Right side = 40.00 m

Elevation of rigid lower boundary = 20.00

Lower rigid boundary at elevation 20.00 - Rough
Rigid boundary on Left side - Rough
Rigid boundary on Right side - Rough
Soil-wall interface - Smooth

OUTPUT OPTIONS

Stage no.	Stage description	Output options: Displacement, Bending mom., Shear force	Active, Passive pressures	Graph. output
1	Apply surcharge no.1 at elev. 45.50	Yes	Yes	Yes
2	Apply surcharge no.2 at elev. 45.50	Yes	Yes	Yes
3	Change EI of wall to 291880kN.m2/m run	No	No	No
4	Apply water pressure profile no.1	No	No	No
5	Excav. to elev. 42.50 on LEFT side	Yes	Yes	Yes
6	Install prop no.1 at elev. 43.00	Yes	Yes	Yes
7	Excav. to elev. 38.50 on LEFT side	Yes	Yes	Yes
8	Install prop no.2 at elev. 39.00	Yes	Yes	Yes
9	Excav. to elev. 35.10 on LEFT side	Yes	Yes	Yes
10	Fill to elev. 36.10 on LEFT side	No	No	No
11	Apply water pressure profile no.3	No	No	No
12	Install prop no.4 at elev. 36.10	Yes	Yes	Yes
13	Install prop no.3 at elev. 41.10	Yes	Yes	Yes
14	Remove prop no.2 at elev. 39.00	Yes	Yes	Yes
15	Install prop no.5 at elev. 46.10	Yes	Yes	Yes
16	Remove prop no.1 at elev. 43.00	Yes	Yes	Yes
17	Change EI of wall to 194590kN.m2/m run	No	No	No
*	Summary output	Yes	-	Yes

Program WALLAP - Copyright (C) 2026 by DL Borin, distributed by GEOSOLVE
150 St. Alphonsus Road, London SW4 7BW, UK www.geosolve.co.uk

Units: kN,m

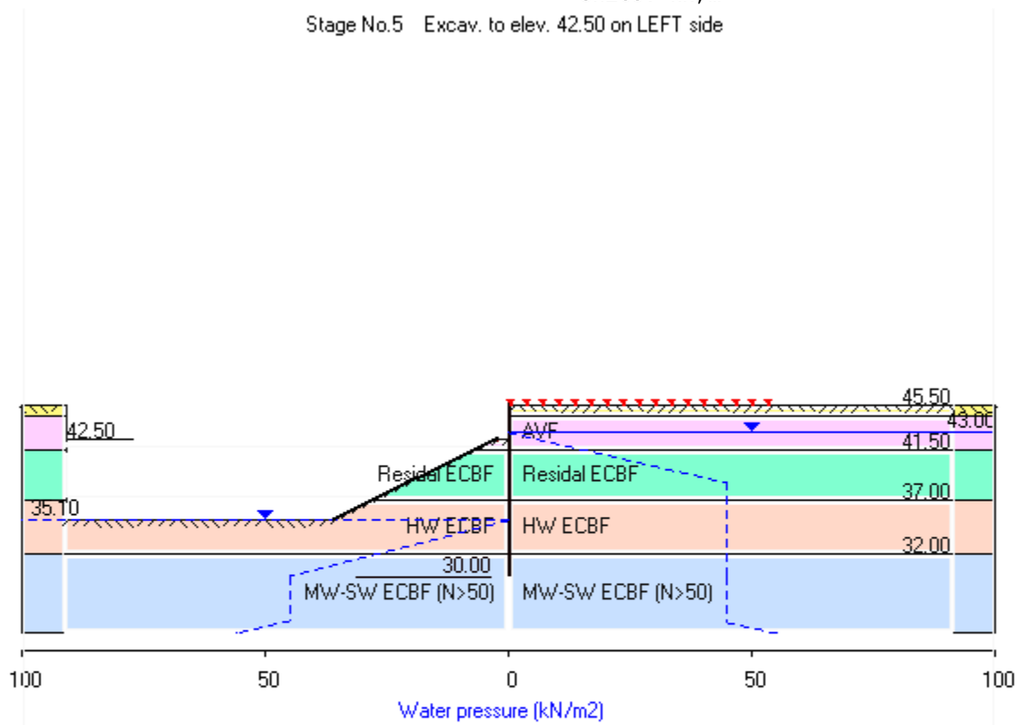

TONKIN + TAYLOR LTD | Sheet No.
Program: WALLAP Version 6.09 Revision A61.B78.R61 | Job No.
Licensed from GEOSOLVE | Made by :
Data filename/Run ID: 20261027_UoA_Section1_Prop_DeflectionEnvelope
New data set - contains default parameters | Date:28-10-2026
Please modify / add | Checked :

Units: kN,m

Stage No. 5 Excavate to elevation 42.50 on LEFT side
Toe of berm at elevation 35.10
Width of top of berm = 1.00
Width of toe of berm = 15.80

STABILITY ANALYSIS of Fully Embedded Wall according to Strength Factor method
Factor of safety on soil strength

Stage No.	Ground level Act.	Ground level Pass.	Prop Elev.	Factor of Safety	FoS for toe elev. = 30.00 Moment equilib. at elev.	Toe elev. for FoS = 1.500 Toe elev.	Wall Penetr-ation	Direction of failure
5	45.50	42.50	Cant.	1.814	30.92	33.71	8.79	R to L

BENDING MOMENT and DISPLACEMENT ANALYSIS of Fully Embedded Wall
Analysis options
2-D finite element model. Active limit arching modelled.
Soil deformations are elastic until the active or passive limit is reached
Open Tension Crack analysis - No

Length of wall perpendicular to section = 1000.00m
Rigid boundaries: Left side 40.00m from wall Rough
Right side 40.00m from wall Rough
Lower boundary at elevation 20.00m Rough
Soil-wall interface Smooth

*** Wall displacements reset to zero at stage 3

Warnings concerning changes to wall stiffness
have been ignored. Please review the calculated bending moments
for unexpected values and read the Help Topic

Node no.	Y coord	Nett pressure	Wall disp.	Wall rotation	Shear force	Bending moment	Prop forces	EI of wall
		kN/m2	m	rad.	kN/m	kN.m/m	kN/m	kN.m2/m
1	46.10	0.00	-0.021	-1.60E-03	0.0	-0.0		291880
2	45.50	0.00	-0.020	-1.60E-03	0.0	-0.0		291880
3	44.50	-4.04	-0.018	-1.59E-03	-2.0	-1.8		291880
		-0.15	-0.018	-1.59E-03	-2.0	-1.8		
4	43.75	-4.41	-0.017	-1.59E-03	-3.7	-4.1		291880
5	43.00	-8.60	-0.016	-1.57E-03	-8.6	-8.8		291880
6	42.50	-14.83	-0.015	-1.55E-03	-14.5	-14.5		291880
		0.03	-0.015	-1.55E-03	-14.5	-14.5		
7	41.50	18.04	-0.014	-1.47E-03	-5.4	-29.9		291880
		17.13	-0.014	-1.47E-03	-5.4	-29.9		
8	41.10	12.67	-0.013	-1.43E-03	0.5	-30.7		291880
9	40.55	8.52	-0.012	-1.37E-03	6.4	-28.7		291880
10	40.00	3.29	-0.012	-1.32E-03	9.6	-24.0		291880
11	39.00	-5.66	-0.010	-1.26E-03	8.4	-13.7		291880
12	38.60	-10.49	-0.010	-1.24E-03	5.2	-10.9		291880
13	38.50	-13.44	-0.010	-1.24E-03	4.0	-10.4		291880
14	37.75	-16.75	-0.009	-1.21E-03	-7.3	-11.2		291880
15	37.00	-19.65	-0.008	-1.17E-03	-21.0	-21.4		291880
		26.82	-0.008	-1.17E-03	-21.0	-21.4		
16	36.10	15.47	-0.007	-1.09E-03	-1.9	-29.4		291880
17	35.60	5.18	-0.006	-1.04E-03	3.2	-28.5		291880
18	35.10	-0.98	-0.006	-9.99E-04	4.3	-26.2		291880
19	34.55	-3.18	-0.005	-9.52E-04	3.1	-23.8		291880

(continued)

Stage No.5 Excavate to elevation 42.50 on LEFT side
Toe of berm at elevation 35.10
Width of top of berm = 1.00
Width of toe of berm = 15.80

Node no.	Y coord	Nett pressure	Wall disp.	Wall rotation	Shear force	Bending moment	Prop forces	EI of wall
		kN/m2	m	rad.	kN/m	kN.m/m	kN/m	kN.m2/m
20	34.00	-6.44	-0.005	-9.09E-04	0.5	-22.4		291880
21	33.00	-7.85	-0.004	-8.29E-04	-6.7	-24.2		291880
22	32.00	-5.69	-0.003	-7.30E-04	-13.4	-33.7		291880
		42.67	-0.003	-7.30E-04	-13.4	-33.7		
23	31.00	16.02	-0.002	-6.30E-04	15.9	-24.8		291880
24	30.00	-43.48	-0.002	-5.88E-04	2.2	-0.0		0
25	29.90	-0.00	-0.002	0	-0.0	0.0		0
26	29.70	-0.08	-0.002	0	-0.0	0.0		0
27	26.85	-0.12	-0.001	0	-0.3	0.0		0
28	24.00	0.04	-0.001	0	-0.4	0.0		0
29	20.00	0.16	-0.000	0	-0.0	0.0		---

		LEFT side						
			Effective stresses				Total earth	Adjusted soil
Node no.	Y coord	Water press.	Vertic -al	Active limit	Passive limit	Earth press.	press.	modulus
		kN/m2	kN/m2	kN/m2	kN/m2	kN/m2	kN/m2	kN/m2
1	46.10	0.00	0.00	0.00	0.00	0.00	0.00	0.0
2	45.50	0.00	0.00	0.00	0.00	0.00	0.00	0.0
3	44.50	0.00	0.00	0.00	0.00	0.00	0.00	0.0
4	43.75	0.00	0.00	0.00	0.00	0.00	0.00	0.0
5	43.00	0.00	0.00	0.00	0.00	0.00	0.00	0.0
6	42.50	0.00	0.00	0.00	0.00	0.00	0.00	0.0
		0.00	0.00	0.00	14.86b	14.86	14.86p	19999
7	41.50	0.00	18.00	0.00	53.42b	45.30	45.30	19999
		0.00	18.00	0.00	43.14b	43.14	43.14p	19999
8	41.10	0.00	25.20	0.99	51.13b	43.58	43.58	19999
9	40.55	0.00	35.10	3.81	61.10b	46.15	46.15	19999
10	40.00	0.00	45.01	6.64	71.61b	48.37	48.37	19999
11	39.00	0.00	63.01	11.77	94.31b	54.72	54.72	19999
12	38.60	0.00	70.22	13.83	101.93b	56.59	56.59	19999
13	38.50	0.00	72.02	14.34	102.66b	56.12	56.12	19999
14	37.75	0.00	85.54	18.19	119.19b	60.90	60.90	19999
15	37.00	0.00	99.06	22.05	135.59b	65.77	65.77	19999
		0.00	99.06	11.66	321.32b	82.56	82.56	49997
16	36.10	0.00	116.19	15.59	310.87b	83.83	83.83	49997
17	35.60	0.00	125.71	17.77	216.93b	82.63	82.63	49997
18	35.10	0.00	135.24	19.95	235.06b	83.54	83.54	49997
19	34.55	4.95	140.77	21.21	259.26b	83.55	88.50	49997
20	34.00	9.90	146.30	22.48	300.68b	83.03	92.93	49997
21	33.00	18.90	156.38	24.79	350.70b	84.42	103.32	49997
22	32.00	27.90	166.48	27.10	392.02b	87.42	115.32	49997
		27.90	166.48	0.00	1791.93b	98.10	126.00	149992
23	31.00	36.90	177.59	0.00	1454.46b	85.66	122.56	149992
24	30.00	45.00	189.61	0.00	1087.37b	57.63	102.63	149992
25	29.90	45.00	191.63	0.00	1180.77b	80.04	125.04	149992
26	29.70	45.00	195.66	0.00	1294.70b	81.37	126.37	149992
27	26.85	45.00	253.13	0.00	1647.54b	101.79	146.79	149992
28	24.00	66.00	289.76	4.01	1946.04b	114.51	180.51	149992
29	20.00	106.00	330.87	11.49	2220.17b	129.12	235.12	149992

(continued)

Stage No.5 Excavate to elevation 42.50 on LEFT side
Toe of berm at elevation 35.10
Width of top of berm = 1.00
Width of toe of berm = 15.80

		RIGHT side						
			Effective stresses				Total	Adjusted
Node no.	Y coord	Water press.	Vertic -al	Active limit	Passive limit	Earth press.	earth press.	soil modulus
		kN/m2	kN/m2	kN/m2	kN/m2	kN/m2	kN/m2	kN/m2
1	46.10	0.00	0.00	0.00	0.00	0.00	0.00	0.0
2	45.50	0.00	0.00	0.00	0.00	0.00	0.00	0.0
		0.00	0.00	0.00	10.58	0.00	0.00a	9999
3	44.50	0.00	21.35	4.04	91.98	4.04	4.04a	9999
		0.00	21.35	0.15	107.85	0.15	0.15a	19999
4	43.75	0.00	35.07	4.41	160.14	4.41	4.41a	19999
5	43.00	0.00	48.58	8.60	211.63	8.60	8.60a	19999
6	42.50	5.00	52.53	9.83	226.69	9.83	14.83a	19999
7	41.50	15.00	60.36	12.26	256.55	12.26	27.26a	19999
		15.00	60.36	11.01	287.26	11.01	26.01a	19999
8	41.10	19.00	63.48	11.90	300.64	11.90	30.90a	19999
9	40.55	24.50	67.76	13.12	319.00	13.12	37.62a	19999
10	40.00	30.00	72.04	14.34	337.37	15.09	45.09	19999
11	39.00	40.00	79.84	16.57	370.79	20.38	60.38	19999
12	38.60	44.00	82.96	17.46	384.17	23.07	67.07	19999
13	38.50	45.00	83.74	17.68	387.52	24.57	69.57	19999
14	37.75	45.00	97.10	21.49	444.82	32.65	77.65	19999
15	37.00	45.00	110.48	25.30	502.16	40.42	85.42	19999
		45.00	110.48	14.28	719.16	10.74	55.74A	49997
16	36.10	45.00	127.44	18.16	818.86	23.36	68.36	49997
17	35.60	45.00	136.86	20.32	874.28	32.44	77.44	49997
18	35.10	45.00	146.29	22.48	929.71	39.52	84.52	49997
19	34.55	45.00	156.67	24.85	990.71	46.68	91.68	49997
20	34.00	45.00	167.05	27.23	1051.72	54.37	99.37	49997
21	33.00	45.00	185.92	31.55	1162.68	66.17	111.17	49997
22	32.00	45.00	204.80	35.87	1273.68	76.02	121.02	49997
		45.00	204.80	0.00	2155.48	38.33	83.33	149992
23	31.00	45.00	224.69	0.00	2322.10	61.54	106.54	149992
24	30.00	45.00	244.58	0.00	2488.75	101.11	146.11	149992
25	29.90	45.00	246.57	0.00	2505.41	80.04	125.04	149992
26	29.70	45.00	250.55	0.00	2538.75	81.44	126.44	149992
27	26.85	45.00	307.27	7.19	3013.92	101.91	146.91	149992
28	24.00	65.00	344.01	13.88	3321.78	115.47	180.47	149992
29	20.00	105.00	383.71	21.11	3654.33	129.96	234.96	149992

Legend: 37.62 a Soil pressure at active limit
43.14 p Soil pressure at passive limit
2220.17 b Passive limit reduced because of berm
55.74 A Arching - soil pressure below active limit

Units: kN,m

Stage No.5 Excav. to elev. 42.50 on LEFT side

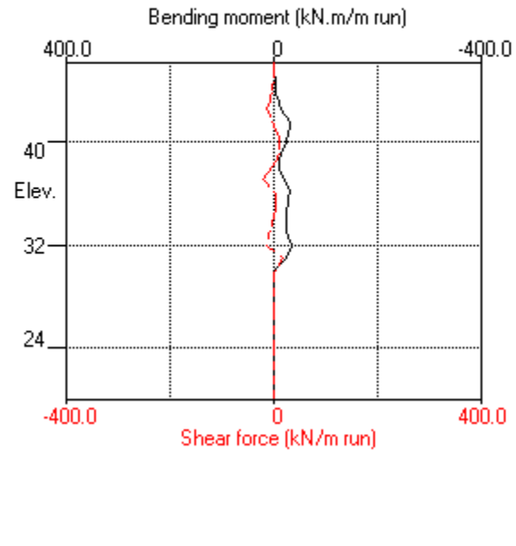

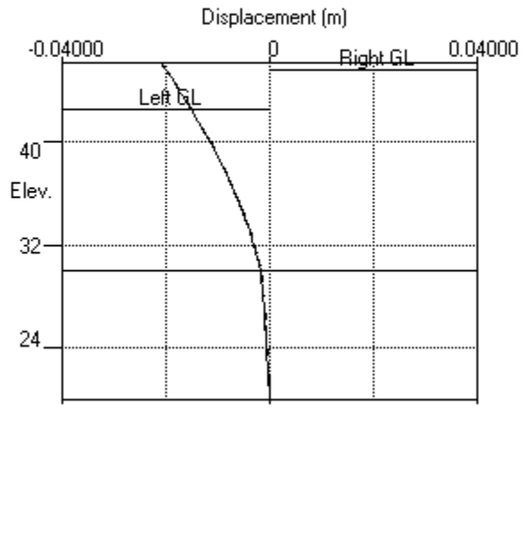

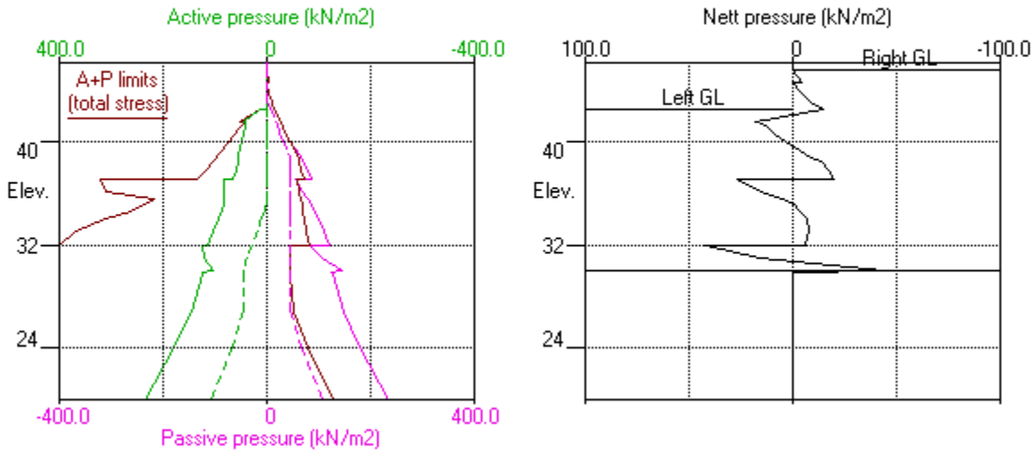
Stage No.5 Excav. to elev. 42.50 on LEFT side
Active pressure (kN/m2)
400.0
0
-400.0
A+P limits
(total stress)
40
Elev.
32
24
-400.0
0
400.0
Passive pressure (kN/m2)
Nett pressure (kN/m2)
100.0
0
-100.0
Right GL
Left GL
40
Elev.
32
24

Units: kN,m

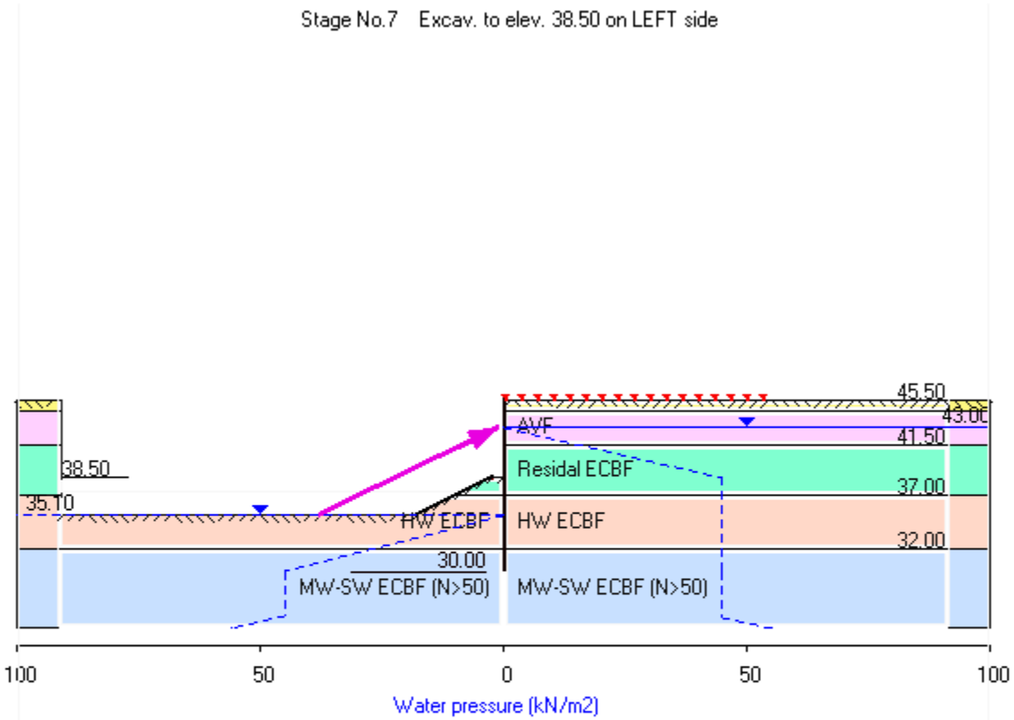
Stage No.7 Excav. to elev. 38.50 on LEFT side
45.50
43.00
AVF
41.50
38.50
Residal ECBF
37.00
35.10
HW ECBF
HW ECBF
32.00
30.00
MW-SW ECBF (N>50)
MW-SW ECBF (N>50)
100
50
0
50
100
Water pressure (kN/m2)

TONKIN + TAYLOR LTD | Sheet No.
Program: WALLAP Version 6.09 Revision A61.B78.R61 | Job No.
Licensed from GEOSOLVE | Made by :
Data filename/Run ID: 20261027_UoA_Section1_Prop_DeflectionEnvelope
New data set - contains default parameters | Date:28-10-2026
Please modify / add | Checked :

Units: kN,m

Stage No. 7 Excavate to elevation 38.50 on LEFT side
Toe of berm at elevation 35.10
Width of top of berm = 1.00
Width of toe of berm = 7.80

STABILITY ANALYSIS of Fully Embedded Wall according to Strength Factor method
Factor of safety on soil strength

Stage No.	Ground level Act.	Pass.	Prop Elev.	Factor of Safety	Moment equilib. at elev.	**FoS for toe elev. = 30.00** Toe elev.	**Toe elev. for FoS = 1.500** Wall Penetr-ation	Direction of failure
7	45.50	38.50	43.00	2.832	n/a	32.52	5.98	R to L

BENDING MOMENT and DISPLACEMENT ANALYSIS of Fully Embedded Wall
Analysis options
2-D finite element model. Active limit arching modelled.
Soil deformations are elastic until the active or passive limit is reached
Open Tension Crack analysis - No

Length of wall perpendicular to section = 1000.00m
Rigid boundaries: Left side 40.00m from wall Rough
Right side 40.00m from wall Rough
Lower boundary at elevation 20.00m Rough
Soil-wall interface Smooth

*** Wall displacements reset to zero at stage 3

Warnings concerning changes to wall stiffness
have been ignored. Please review the calculated bending moments
for unexpected values and read the Help Topic

Node no.	Y coord	Nett pressure	Wall disp.	Wall rotation	Shear force	Bending moment	Prop forces	EI of wall
		kN/m2	m	rad.	kN/m	kN.m/m	kN/m	kN.m2/m
1	46.10	0.00	-0.019	4.74E-05	0.0	0.0		291880
2	45.50	0.00	-0.019	4.74E-05	0.0	-0.0		291880
		-10.58	-0.019	4.74E-05	0.0	-0.0		
3	44.50	-12.27	-0.019	5.95E-05	-11.4	-7.1		291880
		-16.60	-0.019	5.95E-05	-11.4	-7.1		
4	43.75	-13.90	-0.019	9.54E-05	-22.9	-21.0		291880
5	43.00	-12.06	-0.019	1.77E-04	-32.6	-42.8	125.5	291880
		-12.06	-0.019	1.77E-04	92.9	-42.8		
6	42.50	-10.95	-0.020	2.12E-04	87.1	1.8		291880
7	41.50	-17.07	-0.020	7.75E-05	73.1	77.5		291880
		-15.83	-0.020	7.75E-05	73.1	77.5		
8	41.10	-19.00	-0.020	-4.71E-05	66.1	105.4		291880
9	40.55	-24.50	-0.020	-2.76E-04	54.2	138.6		291880
10	40.00	-43.09	-0.019	-5.60E-04	35.6	164.4		291880
11	39.00	-56.57	-0.019	-1.14E-03	-14.2	176.5		291880
12	38.60	-61.46	-0.018	-1.37E-03	-37.8	166.1		291880
13	38.50	-62.68	-0.018	-1.43E-03	-44.1	162.0		291880
		-45.40	-0.018	-1.43E-03	-44.1	162.0		
14	37.75	-23.88	-0.017	-1.79E-03	-70.0	116.9		291880
15	37.00	-17.09	-0.015	-2.01E-03	-85.4	57.7		291880
		36.30	-0.015	-2.01E-03	-85.4	57.7		
16	36.10	36.17	-0.013	-2.10E-03	-52.8	-4.4		291880
17	35.60	26.12	-0.012	-2.07E-03	-37.2	-26.3		291880

(continued)

Stage No.7 Excavate to elevation 38.50 on LEFT side
Toe of berm at elevation 35.10
Width of top of berm = 1.00
Width of toe of berm = 7.80

Node no.	Y coord	Nett pressure	Wall disp.	Wall rotation	Shear force	Bending moment	Prop forces	EI of wall
		kN/m2	m	rad.	kN/m	kN.m/m	kN/m	kN.m2/m
18	35.10	19.64	-0.011	-2.01E-03	-25.8	-41.6		291880
19	34.55	17.51	-0.010	-1.92E-03	-15.6	-52.7		291880
20	34.00	4.53	-0.009	-1.82E-03	-9.5	-58.4		291880
21	33.00	-5.54	-0.007	-1.61E-03	-10.0	-64.6		291880
22	32.00	-8.56	-0.006	-1.37E-03	-17.0	-76.4		291880
		82.17	-0.006	-1.37E-03	-17.0	-76.4		
23	31.00	26.37	-0.005	-1.15E-03	37.2	-51.3		291880
24	30.00	-91.66	-0.004	-1.06E-03	4.6	0.0		0
25	29.90	-0.00	-0.004	0	-0.0	0.0		0
26	29.70	-0.10	-0.004	0	-0.0	0.0		0
27	26.85	-0.13	-0.002	0	-0.3	0.0		0
28	24.00	0.00	-0.002	0	-0.5	0.0		0
29	20.00	0.25	-0.000	0	-0.0	0.0		---

At elev. 43.00 Prop force = 125.5 kN/m run (horiz.)
= 138.4 kN/m run (inclined)

21	33.00	18.90	84.23	8.27	268.98b	73.71	92.61	49998
22	32.00	27.90	94.32	10.58	314.36b	74.06	101.96	49998
		27.90	94.32	0.00	1197.54b	106.10	134.00	149994
23	31.00	36.90	105.44	0.00	1099.50b	79.37	116.27	149994
24	30.00	45.00	117.48	0.00	984.62b	22.05	67.05	149994
25	29.90	45.00	119.50	0.00	1045.08b	68.56	113.56	149994
26	29.70	45.00	123.53	0.00	1128.62b	69.88	114.88	149994
27	26.85	45.00	181.19	0.00	1533.60b	90.20	135.20	149994
28	24.00	66.00	218.18	0.00	1841.94b	102.78	168.78	149994
29	20.00	106.00	260.15	0.00	2152.96b	117.41	223.41	149994

LEFT side

Node no.	Y coord	Water press.	Effective stresses: Vertic -al	Active limit	Passive limit	Earth press.	Total earth press.	Adjusted soil modulus
		kN/m2	kN/m2	kN/m2	kN/m2	kN/m2	kN/m2	kN/m2
1	46.10	0.00	0.00	0.00	0.00	0.00	0.00	0.0
2	45.50	0.00	0.00	0.00	0.00	0.00	0.00	0.0
3	44.50	0.00	0.00	0.00	0.00	0.00	0.00	0.0
4	43.75	0.00	0.00	0.00	0.00	0.00	0.00	0.0
5	43.00	0.00	0.00	0.00	0.00	0.00	0.00	0.0
6	42.50	0.00	0.00	0.00	0.00	0.00	0.00	0.0
7	41.50	0.00	0.00	0.00	0.00	0.00	0.00	0.0
8	41.10	0.00	0.00	0.00	0.00	0.00	0.00	0.0
9	40.55	0.00	0.00	0.00	0.00	0.00	0.00	0.0
10	40.00	0.00	0.00	0.00	0.00	0.00	0.00	0.0
11	39.00	0.00	0.00	0.00	0.00	0.00	0.00	0.0
12	38.60	0.00	0.00	0.00	0.00	0.00	0.00	0.0
13	38.50	0.00	0.00	0.00	0.00	0.00	0.00	0.0
		0.00	0.00	0.00	17.28b	17.28	17.28p	19999
14	37.75	0.00	13.50	0.00	42.60b	42.60	42.60p	19999
15	37.00	0.00	27.00	1.51	54.76b	53.21	53.21	19999
		0.00	27.00	0.00	95.58b	95.58	95.58p	49998
16	36.10	0.00	44.11	0.00	122.68b	99.33	99.33	49998
17	35.60	0.00	53.62	1.26	110.57b	91.44	91.44	49998
18	35.10	0.00	63.13	3.44	141.36b	87.12	87.12	49998
19	34.55	4.95	68.65	4.70	177.82b	82.41	87.36	49998
20	34.00	9.90	74.17	5.97	217.68b	76.90	86.80	49998

(continued)

Stage No.7 Excavate to elevation 38.50 on LEFT side
Toe of berm at elevation 35.10
Width of top of berm = 1.00
Width of toe of berm = 7.80

		RIGHT side						
			Effective stresses				Total	Adjusted
Node no.	Y coord	Water press.	Vertic -al	Active limit	Passive limit	Earth press.	earth press.	soil modulus
		kN/m2	kN/m2	kN/m2	kN/m2	kN/m2	kN/m2	kN/m2
1	46.10	0.00	0.00	0.00	0.00	0.00	0.00	0.0
2	45.50	0.00	0.00	0.00	0.00	0.00	0.00	0.0
		0.00	0.00	0.00	10.58	10.58	10.58p	9999
3	44.50	0.00	21.35	4.04	91.98	12.27	12.27	9999
		0.00	21.35	0.15	107.85	16.60	16.60	19999
4	43.75	0.00	35.07	4.41	160.14	13.90	13.90	19999
5	43.00	0.00	48.58	8.60	211.63	12.06	12.06	19999
6	42.50	5.00	52.53	9.83	226.69	5.95	10.95A	19999
7	41.50	15.00	60.36	12.26	256.55	2.07	17.07A	19999
		15.00	60.36	11.01	287.26	0.83	15.83A	19999
8	41.10	19.00	63.48	11.90	300.64	0.00	19.00A	19999
9	40.55	24.50	67.76	13.12	319.00	0.00	24.50A	19999
10	40.00	30.00	72.04	14.34	337.37	13.09	43.09A	19999
11	39.00	40.00	79.84	16.57	370.79	16.57	56.57a	19999
12	38.60	44.00	82.96	17.46	384.17	17.46	61.46a	19999
13	38.50	45.00	83.74	17.68	387.52	17.68	62.68a	19999
14	37.75	45.00	97.10	21.49	444.82	21.49	66.49a	19999
15	37.00	45.00	110.48	25.30	502.16	25.30	70.30a	19999
		45.00	110.48	14.28	719.16	14.28	59.28a	49997
16	36.10	45.00	127.44	18.16	818.86	18.16	63.16a	49997
17	35.60	45.00	136.86	20.32	874.28	20.32	65.32a	49997
18	35.10	45.00	146.29	22.48	929.71	22.48	67.48a	49997
19	34.55	45.00	156.67	24.85	990.71	24.85	69.85a	49997
20	34.00	45.00	167.05	27.23	1051.72	37.27	82.27	49997
21	33.00	45.00	185.92	31.55	1162.68	53.14	98.14	49997
22	32.00	45.00	204.80	35.87	1273.68	65.52	110.52	49997
		45.00	204.80	0.00	2155.48	6.83	51.83	149992
23	31.00	45.00	224.69	0.00	2322.10	44.89	89.89	149992
24	30.00	45.00	244.58	0.00	2488.75	113.72	158.72	149992
25	29.90	45.00	246.57	0.00	2505.41	68.57	113.57	149992
26	29.70	45.00	250.55	0.00	2538.75	69.97	114.97	149992
27	26.85	45.00	307.27	7.19	3013.92	90.33	135.33	149992
28	24.00	65.00	344.01	13.88	3321.78	103.78	168.78	149992
29	20.00	105.00	383.71	21.11	3654.33	118.15	223.15	149992

Legend: 69.85 a Soil pressure at active limit
10.58 p Soil pressure at passive limit
2152.96 b Passive limit reduced because of berm
43.09 A Arching - soil pressure below active limit

Units: kN,m

Stage No.7 Excav. to elev. 38.50 on LEFT side

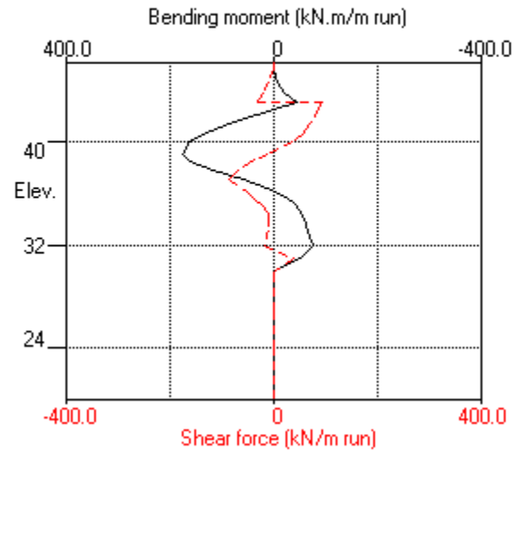

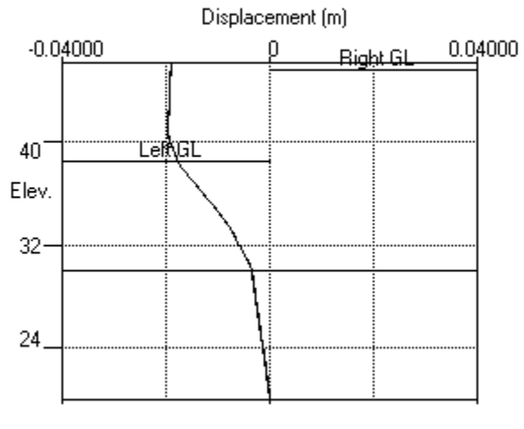

Units: kN,m

Stage No.9 Excav. to elev. 35.10 on LEFT side

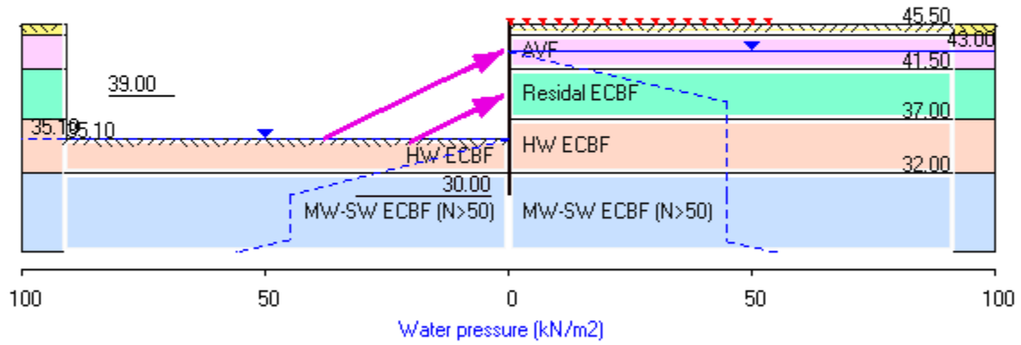

TONKIN + TAYLOR LTD | Sheet No.
Program: WALLAP Version 6.09 Revision A61.B78.R61 | Job No.
Licensed from GEOSOLVE | Made by :
Data filename/Run ID: 20261027_UoA_Section1_Prop_DeflectionEnvelope
New data set - contains default parameters | Date:28-10-2026
Please modify / add | Checked :

Units: kN,m

Stage No. 9 Excavate to elevation 35.10 on LEFT side

STABILITY ANALYSIS of Fully Embedded Wall according to Strength Factor method
Factor of safety on soil strength

Stage No.	Ground level Act.	Ground level Pass.	Prop Elev.	FoS for toe elev. = 30.00 Factor of Safety	Moment equilib. at elev.	Toe elev. for FoS = 1.500 Toe elev.	Wall Penetr -ation	Direction of failure
9	35.10	45.50		More than one prop. No FoS calc.				

BENDING MOMENT and DISPLACEMENT ANALYSIS of Fully Embedded Wall
Analysis options
2-D finite element model. Active limit arching modelled.
Soil deformations are elastic until the active or passive limit is reached
Open Tension Crack analysis - No

Length of wall perpendicular to section = 1000.00m
Rigid boundaries: Left side 40.00m from wall Rough
Right side 40.00m from wall Rough
Lower boundary at elevation 20.00m Rough
Soil-wall interface Smooth

*** Wall displacements reset to zero at stage 3

Warnings concerning changes to wall stiffness
have been ignored. Please review the calculated bending moments
for unexpected values and read the Help Topic

Node no.	Y coord	Nett pressure kN/m2	Wall disp. m	Wall rotation rad.	Shear force kN/m	Bending moment kN.m/m	Prop forces kN/m	EI of wall kN.m2/m
1	46.10	0.00	-0.018	4.12E-04	0.0	0.0		291880
2	45.50	0.00	-0.018	4.12E-04	0.0	-0.0		291880
		-10.58	-0.018	4.12E-04	0.0	-0.0		
3	44.50	-15.37	-0.019	4.24E-04	-13.0	-7.1		291880
		-22.81	-0.019	4.24E-04	-13.0	-7.1		
4	43.75	-19.63	-0.019	4.63E-04	-28.9	-23.9		291880
5	43.00	-17.38	-0.019	5.60E-04	-42.8	-51.8	122.3	291880
		-17.38	-0.019	5.60E-04	79.5	-51.8		
6	42.50	-15.91	-0.020	6.17E-04	71.2	-14.5		291880
7	41.50	-21.77	-0.020	5.70E-04	52.4	42.7		291880
		-20.52	-0.020	5.70E-04	52.4	42.7		
8	41.10	-23.29	-0.020	4.99E-04	43.6	62.0		291880
9	40.55	-28.37	-0.021	3.64E-04	29.4	82.1		291880
10	40.00	-45.78	-0.021	1.99E-04	9.0	93.8		291880
11	39.00	-57.50	-0.021	-9.29E-05	-42.6	77.9	163.1	291880
		-57.50	-0.021	-9.29E-05	120.5	77.9		
12	38.60	-60.04	-0.021	-2.28E-04	96.9	121.4		291880
13	38.50	-58.31	-0.021	-2.71E-04	91.0	130.8		291880
14	37.75	-58.50	-0.020	-6.72E-04	47.2	181.0		291880
15	37.00	-59.67	-0.020	-1.16E-03	2.9	198.9		291880
		-45.00	-0.020	-1.16E-03	2.9	198.9		
16	36.10	-51.95	-0.018	-1.75E-03	-40.7	182.8		291880
17	35.60	-65.32	-0.018	-2.04E-03	-70.0	156.3		291880
18	35.10	-67.48	-0.016	-2.27E-03	-103.2	113.3		291880
		2.20	-0.016	-2.27E-03	-103.2	113.3		
19	34.55	31.44	-0.015	-2.43E-03	-94.0	57.0		291880

(continued)

Stage No.9 Excavate to elevation 35.10 on LEFT side

Node no.	Y coord	Nett pressure	Wall disp.	Wall rotation	Shear force	Bending moment	Prop forces	EI of wall
		kN/m2	m	rad.	kN/m	kN.m/m	kN/m	kN.m2/m
20	34.00	25.87	-0.014	-2.49E-03	-78.2	10.3		291880
21	33.00	20.68	-0.011	-2.42E-03	-54.9	-54.0		291880
22	32.00	6.41	-0.009	-2.16E-03	-41.4	-97.6		291880
		122.27	-0.009	-2.16E-03	-41.4	-97.6		
23	31.00	56.22	-0.007	-1.86E-03	47.8	-76.9		291880
24	30.00	-138.09	-0.005	-1.73E-03	6.9	0.0		0
25	29.90	-0.00	-0.005	0	-0.0	0.0		0
26	29.70	-0.08	-0.005	0	-0.0	0.0		0
27	26.85	-0.13	-0.004	0	-0.3	0.0		0
28	24.00	-0.01	-0.002	0	-0.5	0.0		0
29	20.00	0.27	-0.000	0	-0.0	0.0		---

At elev. 43.00 Prop force = 122.3 kN/m run (horiz.)
= 135.0 kN/m run (inclined)

At elev. 39.00 Prop force = 163.1 kN/m run (horiz.)
= 179.9 kN/m run (inclined)

		LEFT side						
		Effective stresses				Total	Adjusted	
Node no.	Y coord	Water press.	Vertic -al	Active limit	Passive limit	Earth press.	earth press.	soil modulus
		kN/m2	kN/m2	kN/m2	kN/m2	kN/m2	kN/m2	kN/m2
1	46.10	0.00	0.00	0.00	0.00	0.00	0.00	0.0
2	45.50	0.00	0.00	0.00	0.00	0.00	0.00	0.0
3	44.50	0.00	0.00	0.00	0.00	0.00	0.00	0.0
4	43.75	0.00	0.00	0.00	0.00	0.00	0.00	0.0
5	43.00	0.00	0.00	0.00	0.00	0.00	0.00	0.0
6	42.50	0.00	0.00	0.00	0.00	0.00	0.00	0.0
7	41.50	0.00	0.00	0.00	0.00	0.00	0.00	0.0
8	41.10	0.00	0.00	0.00	0.00	0.00	0.00	0.0
9	40.55	0.00	0.00	0.00	0.00	0.00	0.00	0.0
10	40.00	0.00	0.00	0.00	0.00	0.00	0.00	0.0
11	39.00	0.00	0.00	0.00	0.00	0.00	0.00	0.0
12	38.60	0.00	0.00	0.00	0.00	0.00	0.00	0.0
13	38.50	0.00	0.00	0.00	0.00	0.00	0.00	0.0
14	37.75	0.00	0.00	0.00	0.00	0.00	0.00	0.0
15	37.00	0.00	0.00	0.00	0.00	0.00	0.00	0.0
16	36.10	0.00	0.00	0.00	0.00	0.00	0.00	0.0
17	35.60	0.00	0.00	0.00	0.00	0.00	0.00	0.0
18	35.10	0.00	0.00	0.00	0.00	0.00	0.00	0.0
		0.00	0.00	0.00	69.68	69.68	69.68p	49999
19	34.55	4.95	5.50	0.00	102.01	96.35	101.30	49999
20	34.00	9.90	11.00	0.00	134.35	88.19	98.09	49999
21	33.00	18.90	21.01	0.00	193.20	78.32	97.22	49999
22	32.00	27.90	31.04	0.00	252.14	71.08	98.98	49999
		27.90	31.04	0.00	699.67	139.37	167.27	149996
23	31.00	36.90	42.08	0.00	792.23	84.62	121.52	149996
24	30.00	45.00	54.06	0.00	892.57	0.00	45.00a	149996
25	29.90	45.00	56.07	0.00	909.41	58.88	103.88	149996
26	29.70	45.00	60.09	0.00	943.09	60.20	105.20	149996
27	26.85	45.00	117.57	0.00	1424.61	80.23	125.23	149996
28	24.00	66.00	154.46	0.00	1733.71	92.46	158.46	149996
29	20.00	106.00	196.56	0.00	2086.40	106.83	212.83	149996

(continued)

Stage No.9 Excavate to elevation 35.10 on LEFT side

RIGHT side

Node no.	Y coord	Effective stresses: Water press.	Vertic -al	Active limit	Passive limit	Earth press.	Total earth press.	Adjusted soil modulus
		kN/m2	kN/m2	kN/m2	kN/m2	kN/m2	kN/m2	kN/m2
1	46.10	0.00	0.00	0.00	0.00	0.00	0.00	0.0
2	45.50	0.00	0.00	0.00	0.00	0.00	0.00	0.0
		0.00	0.00	0.00	10.58	10.58	10.58p	9999
3	44.50	0.00	21.35	4.04	91.98	15.37	15.37	9999
		0.00	21.35	0.15	107.85	22.81	22.81	19999
4	43.75	0.00	35.07	4.41	160.14	19.63	19.63	19999
5	43.00	0.00	48.58	8.60	211.63	17.38	17.38	19999
6	42.50	5.00	52.53	9.83	226.69	10.91	15.91	19999
7	41.50	15.00	60.36	12.26	256.55	6.77	21.77A	19999
		15.00	60.36	11.01	287.26	5.52	20.52A	19999
8	41.10	19.00	63.48	11.90	300.64	4.29	23.29A	19999
9	40.55	24.50	67.76	13.12	319.00	3.87	28.37A	19999
10	40.00	30.00	72.04	14.34	337.37	15.78	45.78	19999
11	39.00	40.00	79.84	16.57	370.79	17.50	57.50	19999
12	38.60	44.00	82.96	17.46	384.17	16.04	60.04A	19999
13	38.50	45.00	83.74	17.68	387.52	13.31	58.31A	19999
14	37.75	45.00	97.10	21.49	444.82	13.50	58.50A	19999
15	37.00	45.00	110.48	25.30	502.16	14.67	59.67A	19999
		45.00	110.48	14.28	719.16	0.00	45.00A	49997
16	36.10	45.00	127.44	18.16	818.86	6.95	51.95A	49997
17	35.60	45.00	136.86	20.32	874.28	20.32	65.32a	49997
18	35.10	45.00	146.29	22.48	929.71	22.48	67.48a	49997
19	34.55	45.00	156.67	24.85	990.71	24.85	69.85a	49997
20	34.00	45.00	167.05	27.23	1051.72	27.23	72.23a	49997
21	33.00	45.00	185.92	31.55	1162.68	31.55	76.55a	49997
22	32.00	45.00	204.80	35.87	1273.68	47.57	92.57	49997
		45.00	204.80	0.00	2155.48	0.00	45.00a	149992
23	31.00	45.00	224.69	0.00	2322.10	20.30	65.30	149992
24	30.00	45.00	244.58	0.00	2488.75	138.09	183.09	149992
25	29.90	45.00	246.57	0.00	2505.41	58.88	103.88	149992
26	29.70	45.00	250.55	0.00	2538.75	60.28	105.28	149992
27	26.85	45.00	307.27	7.19	3013.92	80.37	125.37	149992
28	24.00	65.00	344.01	13.88	3321.78	93.47	158.47	149992
29	20.00	105.00	383.71	21.11	3654.33	107.56	212.56	149992

Legend: 45.00 a Soil pressure at active limit
10.58 p Soil pressure at passive limit
51.95 A Arching - soil pressure below active limit

Units: kN,m

Stage No.9 Excav. to elev. 35.10 on LEFT side

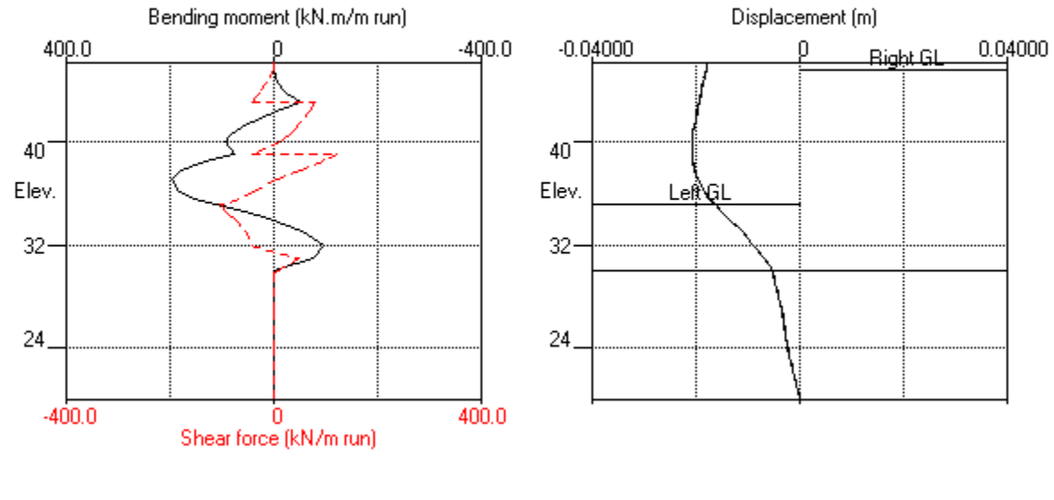

Stage No.9 Excav. to elev. 35.10 on LEFT side

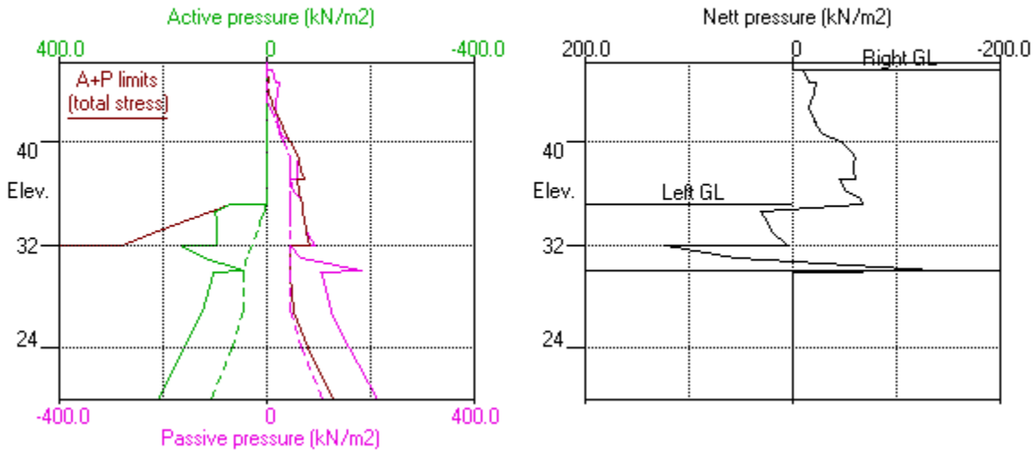

Units: kN,m

Stage No.10 Fill to elev. 36.10 on LEFT side

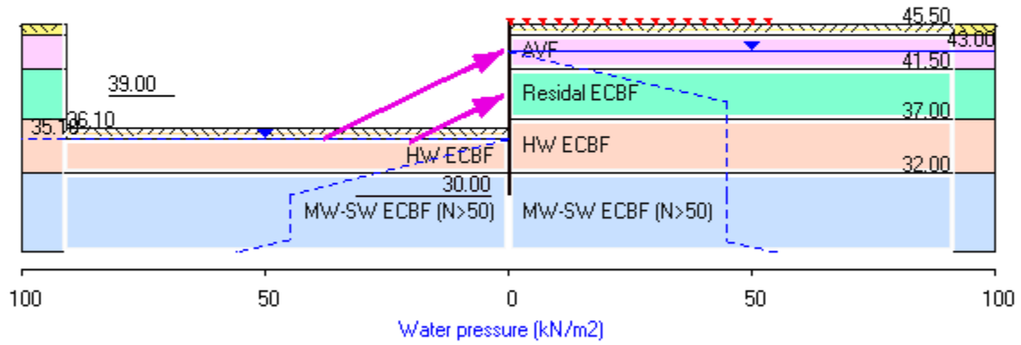

TONKIN + TAYLOR LTD | Sheet No.
Program: WALLAP Version 6.09 Revision A61.B78.R61 | Job No.
Licensed from GEOSOLVE | Made by :
Data filename/Run ID: 20261027_UoA_Section1_Prop_DeflectionEnvelope
New data set - contains default parameters | Date:28-10-2026
Please modify / add | Checked :

Units: kN,m

Stage No. 10 Fill to elevation 36.10 on LEFT side with soil type 5

STABILITY ANALYSIS of Fully Embedded Wall according to Strength Factor method
Factor of safety on soil strength

Stage No.	Ground level Act.	Ground level Pass.	Prop Elev.	FoS for toe elev. = 30.00 Factor of Safety	Moment equilib. at elev.	Toe elev. for FoS = 1.500 Toe elev.	Wall Penetr -ation	Direction of failure
10	36.10	45.50		More than one prop. No FoS calc.				

BENDING MOMENT and DISPLACEMENT ANALYSIS of Fully Embedded Wall
Analysis options
2-D finite element model. Active limit arching modelled.
Soil deformations are elastic until the active or passive limit is reached
Open Tension Crack analysis - No

Length of wall perpendicular to section = 1000.00m
Rigid boundaries: Left side 40.00m from wall Rough
Right side 40.00m from wall Rough
Lower boundary at elevation 20.00m Rough
Soil-wall interface Smooth

*** Wall displacements reset to zero at stage 3

Warnings concerning changes to wall stiffness
have been ignored. Please review the calculated bending moments
for unexpected values and read the Help Topic

Node no.	Y coord	Nett pressure kN/m2	Wall disp. m	Wall rotation rad.	Shear force kN/m	Bending moment kN.m/m	Prop forces kN/m	EI of wall kN.m2/m
1	46.10	0.00	-0.018	4.07E-04	0.0	-0.0		291880
2	45.50	0.00	-0.018	4.07E-04	0.0	-0.0		291880
		-10.51	-0.018	4.07E-04	0.0	-0.0		
3	44.50	-15.27	-0.019	4.19E-04	-12.9	-7.1		291880
		-22.62	-0.019	4.19E-04	-12.9	-7.1		
4	43.75	-19.40	-0.019	4.58E-04	-28.6	-23.8		291880
5	43.00	-17.12	-0.019	5.55E-04	-42.3	-51.4	122.5	291880
		-17.12	-0.019	5.55E-04	80.1	-51.4		
6	42.50	-15.61	-0.020	6.11E-04	71.9	-13.8		291880
7	41.50	-21.43	-0.020	5.59E-04	53.4	44.3		291880
		-20.19	-0.020	5.59E-04	53.4	44.3		
8	41.10	-22.93	-0.020	4.86E-04	44.8	64.0		291880
9	40.55	-27.98	-0.021	3.46E-04	30.8	84.9		291880
10	40.00	-45.38	-0.021	1.75E-04	10.6	97.3		291880
11	39.00	-57.10	-0.021	-1.31E-04	-40.6	83.3	158.8	291880
		-57.10	-0.021	-1.31E-04	118.1	83.3		
12	38.60	-59.68	-0.021	-2.74E-04	94.8	125.8		291880
13	38.50	-58.01	-0.021	-3.19E-04	88.9	135.0		291880
14	37.75	-58.27	-0.020	-7.28E-04	45.3	183.7		291880
15	37.00	-59.56	-0.020	-1.22E-03	1.1	200.3		291880
		-45.00	-0.020	-1.22E-03	1.1	200.3		
16	36.10	-57.07	-0.018	-1.81E-03	-44.8	182.6		291880
17	35.60	-64.06	-0.017	-2.10E-03	-75.1	153.5		291880
18	35.10	-66.59	-0.016	-2.32E-03	-107.8	108.2		291880
		6.58	-0.016	-2.32E-03	-107.8	108.2		
19	34.55	34.89	-0.015	-2.47E-03	-96.4	50.1		291880

(continued)

Stage No.10 Fill to elevation 36.10 on LEFT side with soil type 5

Node no.	Y coord	Nett pressure	Wall disp.	Wall rotation	Shear force	Bending moment	Prop forces	EI of wall
		kN/m2	m	rad.	kN/m	kN.m/m	kN/m	kN.m2/m
20	34.00	28.71	-0.013	-2.52E-03	-78.9	2.5		291880
21	33.00	23.28	-0.011	-2.42E-03	-52.9	-61.0		291880
22	32.00	9.55	-0.009	-2.14E-03	-36.5	-101.2		291880
		118.32	-0.009	-2.14E-03	-36.5	-101.2		
23	31.00	53.92	-0.007	-1.84E-03	49.6	-77.5		291880
24	30.00	-139.29	-0.005	-1.71E-03	7.0	0.0		0
25	29.90	-0.00	-0.005	0	-0.0	0.0		0
26	29.70	-0.09	-0.005	0	-0.0	0.0		0
27	26.85	-0.13	-0.003	0	-0.3	0.0		0
28	24.00	-0.01	-0.002	0	-0.5	0.0		0
29	20.00	0.27	-0.000	0	-0.0	0.0		---

At elev. 43.00 Prop force = 122.5 kN/m run (horiz.)
= 135.1 kN/m run (inclined)

At elev. 39.00 Prop force = 158.8 kN/m run (horiz.)
= 175.2 kN/m run (inclined)

		LEFT side						
		Effective stresses				Total	Adjusted	
Node no.	Y coord	Water press.	Vertic -al	Active limit	Passive limit	Earth press.	earth press.	soil modulus
		kN/m2	kN/m2	kN/m2	kN/m2	kN/m2	kN/m2	kN/m2
1	46.10	0.00	0.00	0.00	0.00	0.00	0.00	0.0
2	45.50	0.00	0.00	0.00	0.00	0.00	0.00	0.0
3	44.50	0.00	0.00	0.00	0.00	0.00	0.00	0.0
4	43.75	0.00	0.00	0.00	0.00	0.00	0.00	0.0
5	43.00	0.00	0.00	0.00	0.00	0.00	0.00	0.0
6	42.50	0.00	0.00	0.00	0.00	0.00	0.00	0.0
7	41.50	0.00	0.00	0.00	0.00	0.00	0.00	0.0
8	41.10	0.00	0.00	0.00	0.00	0.00	0.00	0.0
9	40.55	0.00	0.00	0.00	0.00	0.00	0.00	0.0
10	40.00	0.00	0.00	0.00	0.00	0.00	0.00	0.0
11	39.00	0.00	0.00	0.00	0.00	0.00	0.00	0.0
12	38.60	0.00	0.00	0.00	0.00	0.00	0.00	0.0
13	38.50	0.00	0.00	0.00	0.00	0.00	0.00	0.0
14	37.75	0.00	0.00	0.00	0.00	0.00	0.00	0.0
15	37.00	0.00	0.00	0.00	0.00	0.00	0.00	0.0
16	36.10	0.00	0.00	0.00	0.00	0.00	0.00	0.0
		0.00	0.00	0.00	0.00	0.00	0.00	149995
17	35.60	0.00	10.00	1.43	125.67	2.17	2.17	149995
18	35.10	0.00	20.00	2.86	251.35	2.26	2.26A	149995
		0.00	20.00	0.00	187.26	75.43	75.43	49998
19	34.55	4.95	25.50	0.00	219.61	101.54	106.49	49998
20	34.00	9.90	31.01	0.00	251.98	93.07	102.97	49998
21	33.00	18.90	41.03	0.00	310.90	83.07	101.97	49998
22	32.00	27.90	51.08	0.68	369.95	76.05	103.95	49998
		27.90	51.08	0.00	867.56	140.90	168.80	149995
23	31.00	36.90	62.15	0.00	960.30	86.91	123.81	149995
24	30.00	45.00	74.15	0.00	1060.85	2.83	47.83	149995
25	29.90	45.00	76.16	0.00	1077.70	62.29	107.29	149995
26	29.70	45.00	80.19	0.00	1111.43	63.60	108.60	149995
27	26.85	45.00	137.73	0.00	1593.57	83.63	128.63	149995
28	24.00	66.00	174.69	0.00	1903.17	95.86	161.86	149995
29	20.00	106.00	216.81	0.00	2256.03	110.23	216.23	149995

(continued)

Stage No.10 Fill to elevation 36.10 on LEFT side with soil type 5

		RIGHT side						
			Effective stresses				Total	Adjusted
Node no.	Y coord	Water press.	Vertic -al	Active limit	Passive limit	Earth press.	earth press.	soil modulus
		kN/m2	kN/m2	kN/m2	kN/m2	kN/m2	kN/m2	kN/m2
1	46.10	0.00	0.00	0.00	0.00	0.00	0.00	0.0
2	45.50	0.00	0.00	0.00	0.00	0.00	0.00	0.0
		0.00	0.00	0.00	10.58	10.51	10.51	9999
3	44.50	0.00	21.35	4.04	91.98	15.27	15.27	9999
		0.00	21.35	0.15	107.85	22.62	22.62	19999
4	43.75	0.00	35.07	4.41	160.14	19.40	19.40	19999
5	43.00	0.00	48.58	8.60	211.63	17.12	17.12	19999
6	42.50	5.00	52.53	9.83	226.69	10.61	15.61	19999
7	41.50	15.00	60.36	12.26	256.55	6.43	21.43A	19999
		15.00	60.36	11.01	287.26	5.19	20.19A	19999
8	41.10	19.00	63.48	11.90	300.64	3.93	22.93A	19999
9	40.55	24.50	67.76	13.12	319.00	3.48	27.98A	19999
10	40.00	30.00	72.04	14.34	337.37	15.38	45.38	19999
11	39.00	40.00	79.84	16.57	370.79	17.10	57.10	19999
12	38.60	44.00	82.96	17.46	384.17	15.68	59.68A	19999
13	38.50	45.00	83.74	17.68	387.52	13.01	58.01A	19999
14	37.75	45.00	97.10	21.49	444.82	13.27	58.27A	19999
15	37.00	45.00	110.48	25.30	502.16	14.56	59.56A	19999
		45.00	110.48	14.28	719.16	0.00	45.00A	49997
16	36.10	45.00	127.44	18.16	818.86	12.07	57.07A	49997
17	35.60	45.00	136.86	20.32	874.28	21.23	66.23	49997
18	35.10	45.00	146.29	22.48	929.71	23.85	68.85	49997
19	34.55	45.00	156.67	24.85	990.71	26.60	71.60	49997
20	34.00	45.00	167.05	27.23	1051.72	29.26	74.26	49997
21	33.00	45.00	185.92	31.55	1162.68	33.69	78.69	49997
22	32.00	45.00	204.80	35.87	1273.68	49.40	94.40	49997
		45.00	204.80	0.00	2155.48	5.48	50.48	149992
23	31.00	45.00	224.69	0.00	2322.10	24.89	69.89	149992
24	30.00	45.00	244.58	0.00	2488.75	142.12	187.12	149992
25	29.90	45.00	246.57	0.00	2505.41	62.30	107.30	149992
26	29.70	45.00	250.55	0.00	2538.75	63.68	108.68	149992
27	26.85	45.00	307.27	7.19	3013.92	83.76	128.76	149992
28	24.00	65.00	344.01	13.88	3321.78	96.87	161.87	149992
29	20.00	105.00	383.71	21.11	3654.33	110.96	215.96	149992

Legend: 12.34 a Soil pressure at active limit
123.45 p Soil pressure at passive limit
57.07 A Arching - soil pressure below active limit

Units: kN,m

Stage No.10 Fill to elev. 36.10 on LEFT side

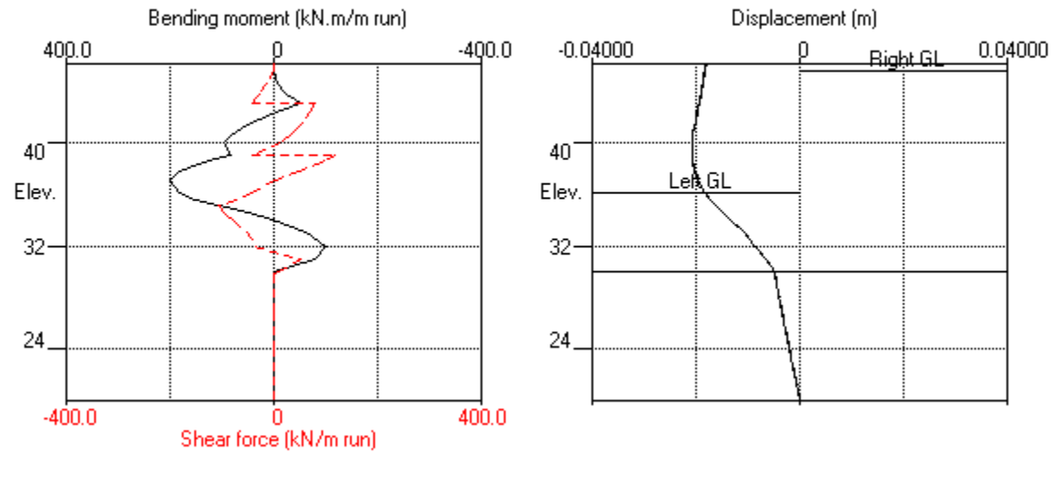

Stage No.10 Fill to elev. 36.10 on LEFT side

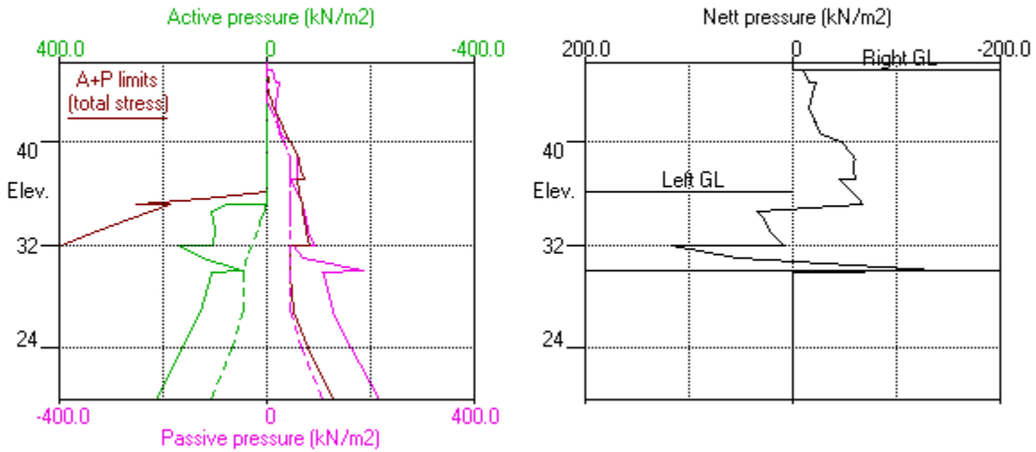

Units: kN,m

Stage No.14 Remove prop no.2 at elev. 39.00

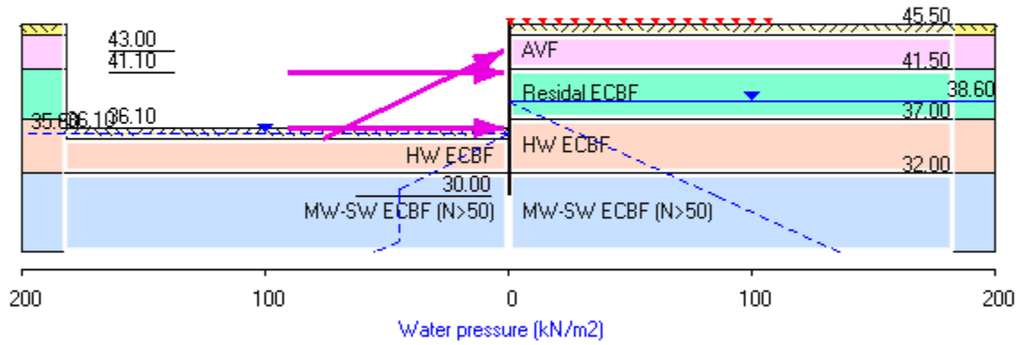

TONKIN + TAYLOR LTD | Sheet No.
Program: WALLAP Version 6.09 Revision A61.B78.R61 | Job No.
Licensed from GEOSOLVE | Made by :
Data filename/Run ID: 20261027_UoA_Section1_Prop_DeflectionEnvelope
New data set - contains default parameters | Date:28-10-2026
Please modify / add | Checked :

Units: kN,m

Stage No. 14 Remove strut or anchor no.2 at elevation 39.00

STABILITY ANALYSIS of Fully Embedded Wall according to Strength Factor method
Factor of safety on soil strength

Stage No.	Ground level Act.	Ground level Pass.	Prop Elev.	FoS for toe elev. = 30.00 Factor of Safety	Moment equilib. at elev.	Toe elev. for FoS = 1.500 Toe elev.	Wall Penetr -ation	Direction of failure
14	36.10	45.50	More than one prop. No FoS calc.					

BENDING MOMENT and DISPLACEMENT ANALYSIS of Fully Embedded Wall
Analysis options
2-D finite element model. Active limit arching modelled.
Soil deformations are elastic until the active or passive limit is reached
Open Tension Crack analysis - No

Length of wall perpendicular to section = 1000.00m
Rigid boundaries: Left side 40.00m from wall Rough
Right side 40.00m from wall Rough
Lower boundary at elevation 20.00m Rough
Soil-wall interface Smooth

*** Wall displacements reset to zero at stage 3

Warnings concerning changes to wall stiffness
have been ignored. Please review the calculated bending moments
for unexpected values and read the Help Topic

Node no.	Y coord	Nett pressure kN/m2	Wall disp. m	Wall rotation rad.	Shear force kN/m	Bending moment kN.m/m	Prop forces kN/m	EI of wall kN.m2/m
1	46.10	0.00	-0.017	4.07E-04	0.0	0.0		291880
2	45.50	0.00	-0.018	4.07E-04	0.0	-0.0		291880
		-10.58	-0.018	4.07E-04	0.0	-0.0		
3	44.50	-15.75	-0.018	4.19E-04	-13.2	-7.1		291880
		-23.56	-0.018	4.19E-04	-13.2	-7.1		
4	43.75	-20.68	-0.018	4.59E-04	-29.8	-24.3		291880
5	43.00	-18.70	-0.019	5.58E-04	-44.5	-53.1	102.5	291880
		-18.70	-0.019	5.58E-04	57.9	-53.1		
6	42.50	-14.72	-0.019	6.27E-04	49.6	-26.7		291880
7	41.50	-15.07	-0.020	6.55E-04	34.7	10.5		291880
		-13.83	-0.020	6.55E-04	34.7	10.5		
8	41.10	-14.07	-0.020	6.33E-04	29.1	23.2	60.0	291880
		-14.07	-0.020	6.33E-04	89.1	23.2		
9	40.55	-15.20	-0.020	5.46E-04	81.0	70.0		291880
10	40.00	-28.11	-0.021	3.75E-04	69.1	112.1		291880
11	39.00	-33.07	-0.021	-9.98E-05	38.5	166.2		291880
12	38.60	-33.32	-0.021	-3.35E-04	25.3	178.9		291880
13	38.50	-32.38	-0.021	-3.97E-04	22.0	181.3		291880
14	37.75	-37.96	-0.020	-8.69E-04	-4.4	186.6		291880
15	37.00	-44.82	-0.019	-1.33E-03	-35.4	171.2		291880
		-30.25	-0.019	-1.33E-03	-35.4	171.2		
16	36.10	-51.14	-0.018	-1.78E-03	-72.1	125.8	47.2	291880
		-51.14	-0.018	-1.78E-03	-24.9	125.8		
17	35.60	-59.72	-0.017	-1.98E-03	-52.6	107.2		291880
18	35.10	-63.68	-0.016	-2.14E-03	-83.4	73.7		291880
		2.83	-0.016	-2.14E-03	-83.4	73.7		

Run ID. 20261027_UoA_Section1_Prop_DeflectionEnvelope | Sheet No.
New data set - contains default parameters | Date:28-10-2026
Please modify / add | Checked :

(continued)

Stage No.14 Remove strut or anchor no.2 at elevation 39.00

Node no.	Y coord	Nett pressure	Wall disp.	Wall rotation	Shear force	Bending moment	Prop forces	EI of wall
		kN/m2	m	rad.	kN/m	kN.m/m	kN/m	kN.m2/m
19	34.55	29.64	-0.015	-2.24E-03	-74.5	28.3		291880
20	34.00	23.52	-0.013	-2.26E-03	-59.9	-8.3		291880
21	33.00	15.66	-0.011	-2.14E-03	-40.3	-56.5		291880
22	32.00	-1.31	-0.009	-1.90E-03	-33.1	-89.1		291880
		103.82	-0.009	-1.90E-03	-33.1	-89.1		
23	31.00	52.05	-0.007	-1.62E-03	44.8	-70.1		291880
24	30.00	-128.77	-0.006	-1.50E-03	6.4	0.0		0
25	29.90	0.22	-0.006	0	0.0	0.0		0
26	29.70	5.80	-0.006	0	0.6	0.0		0
27	26.85	-2.24	-0.005	0	5.7	0.0		0
28	24.00	-0.89	-0.003	0	1.2	0.0		0
29	20.00	0.27	-0.000	0	-0.0	0.0		---

At elev. 43.00 Prop force = 102.5 kN/m run (horiz.)
= 113.1 kN/m run (inclined)
At elev. 41.10 Prop force = 60.0 kN/m run
At elev. 36.10 Prop force = 47.2 kN/m run

LEFT side

Node no.	Y coord	Water press.	Effective stresses: Vertic -al	Active limit	Passive limit	Earth press.	Total earth press.	Adjusted soil modulus
		kN/m2	kN/m2	kN/m2	kN/m2	kN/m2	kN/m2	kN/m2
1	46.10	0.00	0.00	0.00	0.00	0.00	0.00	0.0
2	45.50	0.00	0.00	0.00	0.00	0.00	0.00	0.0
3	44.50	0.00	0.00	0.00	0.00	0.00	0.00	0.0
4	43.75	0.00	0.00	0.00	0.00	0.00	0.00	0.0
5	43.00	0.00	0.00	0.00	0.00	0.00	0.00	0.0
6	42.50	0.00	0.00	0.00	0.00	0.00	0.00	0.0
7	41.50	0.00	0.00	0.00	0.00	0.00	0.00	0.0
8	41.10	0.00	0.00	0.00	0.00	0.00	0.00	0.0
9	40.55	0.00	0.00	0.00	0.00	0.00	0.00	0.0
10	40.00	0.00	0.00	0.00	0.00	0.00	0.00	0.0
11	39.00	0.00	0.00	0.00	0.00	0.00	0.00	0.0
12	38.60	0.00	0.00	0.00	0.00	0.00	0.00	0.0
13	38.50	0.00	0.00	0.00	0.00	0.00	0.00	0.0
14	37.75	0.00	0.00	0.00	0.00	0.00	0.00	0.0
15	37.00	0.00	0.00	0.00	0.00	0.00	0.00	0.0
16	36.10	0.00	0.00	0.00	0.00	0.00	0.00	0.0
		0.00	0.00	0.00	0.00	0.00	0.00	149995
17	35.60	0.00	10.00	1.43	125.67	4.58	4.58	149995
18	35.10	4.50	15.50	2.21	194.80	1.19	5.69A	149995
		4.50	15.50	0.00	160.80	67.70	72.20	49998
19	34.55	9.45	21.00	0.00	193.16	94.62	104.07	49998
20	34.00	14.40	26.51	0.00	225.53	87.88	102.28	49998
21	33.00	23.40	36.53	0.00	284.45	79.93	103.33	49998
22	32.00	32.40	46.58	0.00	343.49	74.61	107.01	49998
		32.40	46.58	0.00	829.85	139.58	171.98	149995
23	31.00	41.40	57.65	0.00	922.60	93.22	134.62	149995
24	30.00	45.00	74.15	0.00	1060.85	21.65	66.65	149995
25	29.90	45.00	76.16	0.00	1077.70	76.30	121.30	149995
26	29.70	45.00	80.19	0.00	1111.43	81.09	126.09	149995
27	26.85	45.00	137.73	0.00	1593.57	106.64	151.64	149995
28	24.00	65.00	175.69	0.00	1911.55	123.01	188.01	149995
29	20.00	105.00	217.81	0.00	2264.41	137.85	242.85	149995

(continued)

Stage No.14 Remove strut or anchor no.2 at elevation 39.00

RIGHT side

Node no.	Y coord	Effective stresses: Water press.	Vertic -al	Active limit	Passive limit	Earth press.	Total earth press.	Adjusted soil modulus
		kN/m2	kN/m2	kN/m2	kN/m2	kN/m2	kN/m2	kN/m2
1	46.10	0.00	0.00	0.00	0.00	0.00	0.00	0.0
2	45.50	0.00	0.00	0.00	0.00	0.00	0.00	0.0
		0.00	0.00	0.00	10.58	10.58	10.58p	9999
3	44.50	0.00	21.35	4.04	91.98	15.75	15.75	9999
		0.00	21.35	0.15	107.85	23.56	23.56	19999
4	43.75	0.00	35.07	4.41	160.14	20.68	20.68	19999
5	43.00	0.00	48.58	8.60	211.63	18.70	18.70	19999
6	42.50	0.00	57.53	11.38	245.75	14.72	14.72	19999
7	41.50	0.00	75.36	16.92	313.73	15.07	15.07A	19999
		0.00	75.36	15.29	351.58	13.83	13.83A	19999
8	41.10	0.00	82.48	17.32	382.10	14.07	14.07A	19999
9	40.55	0.00	92.26	20.11	424.05	15.20	15.20A	19999
10	40.00	0.00	102.04	22.90	466.00	28.11	28.11	19999
11	39.00	0.00	119.84	27.97	542.29	33.07	33.07	19999
12	38.60	0.00	126.96	30.00	572.83	33.32	33.32	19999
13	38.50	1.00	127.74	30.22	576.18	31.38	32.38	19999
14	37.75	8.50	133.60	31.89	601.32	29.46	37.96A	19999
15	37.00	16.00	139.48	33.57	626.50	28.82	44.82A	19999
		16.00	139.48	20.92	889.64	14.25	30.25A	49997
16	36.10	25.00	147.44	22.74	936.43	26.14	51.14	49997
17	35.60	30.00	151.86	23.75	962.46	34.30	64.30	49997
18	35.10	35.00	156.29	24.77	988.50	34.37	69.37	49997
19	34.55	40.50	161.17	25.88	1017.16	33.93	74.43	49997
20	34.00	46.00	166.05	27.00	1045.84	32.76	78.76	49997
21	33.00	56.00	174.92	29.03	1098.01	31.67	87.67	49997
22	32.00	66.00	183.80	31.06	1150.23	42.31	108.31	49997
		66.00	183.80	0.00	1979.55	2.16	68.16	149992
23	31.00	76.00	193.69	0.00	2062.38	6.57	82.57	149992
24	30.00	86.00	203.58	0.00	2145.25	109.42	195.42	149992
25	29.90	87.00	204.57	0.00	2153.54	34.08	121.08	149992
26	29.70	89.00	206.55	0.00	2170.12	31.29	120.29	149992
27	26.85	117.50	234.77	0.00	2406.52	36.39	153.89	149992
28	24.00	146.00	263.01	0.00	2643.17	42.90	188.90	149992
29	20.00	186.00	302.71	6.36	2975.71	56.58	242.58	149992

Legend: 12.34 a Soil pressure at active limit
10.58 p Soil pressure at passive limit
30.25 A Arching - soil pressure below active limit

Units: kN,m

Stage No.14 Remove prop no.2 at elev. 39.00

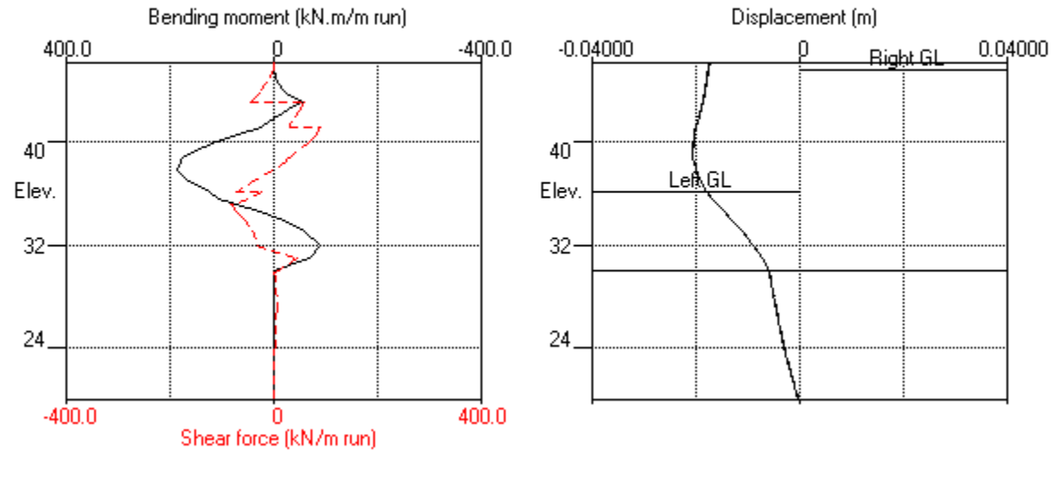

Stage No.14 Remove prop no.2 at elev. 39.00

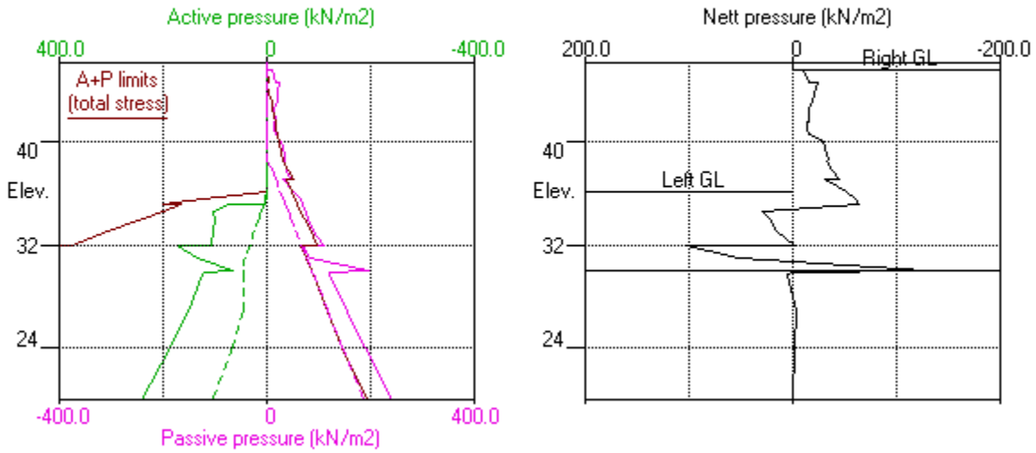

Units: kN,m

Stage No.16 Remove prop no.1 at elev. 43.00

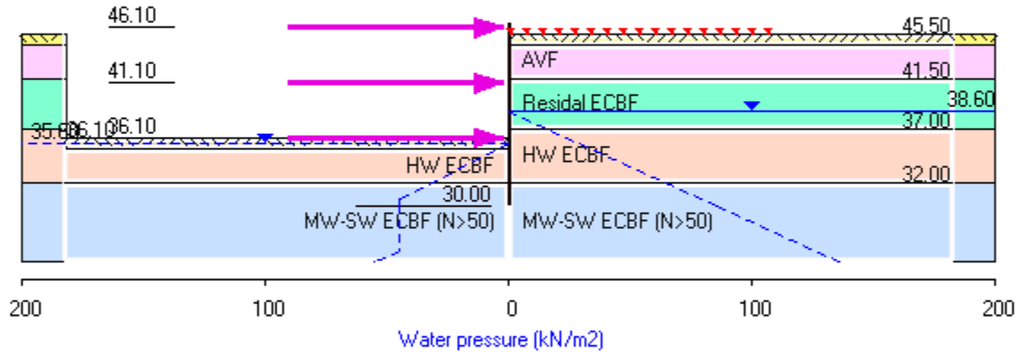

TONKIN + TAYLOR LTD | Sheet No.
Program: WALLAP Version 6.09 Revision A61.B78.R61 | Job No.
Licensed from GEOSOLVE | Made by :
Data filename/Run ID: 20261027_UoA_Section1_Prop_DeflectionEnvelope
New data set - contains default parameters | Date:28-10-2026
Please modify / add | Checked :

Units: kN,m

Stage No. 16 Remove strut or anchor no.1 at elevation 43.00

STABILITY ANALYSIS of Fully Embedded Wall according to Strength Factor method
Factor of safety on soil strength

Stage No.	Ground level Act.	Ground level Pass.	Prop Elev.	FoS for toe elev. = 30.00 Factor of Safety	Moment equilib. at elev.	Toe elev. for FoS = 1.500 Toe elev.	Wall Penetr -ation	Direction of failure
16	36.10	45.50	More than one prop. No FoS calc.					

BENDING MOMENT and DISPLACEMENT ANALYSIS of Fully Embedded Wall
Analysis options
2-D finite element model. Active limit arching modelled.
Soil deformations are elastic until the active or passive limit is reached
Open Tension Crack analysis - No

Length of wall perpendicular to section = 1000.00m
Rigid boundaries: Left side 40.00m from wall Rough
Right side 40.00m from wall Rough
Lower boundary at elevation 20.00m Rough
Soil-wall interface Smooth

*** Wall displacements reset to zero at stage 3

Warnings concerning changes to wall stiffness
have been ignored. Please review the calculated bending moments
for unexpected values and read the Help Topic

Node no.	Y coord	Nett pressure kN/m2	Wall disp. m	Wall rotation rad.	Shear force kN/m	Bending moment kN.m/m	Prop forces kN/m	EI of wall kN.m2/m
1	46.10	0.00	-0.018	7.82E-04	28.3	0.0	28.3	291880
2	45.50	0.00	-0.018	7.64E-04	28.3	17.0		291880
		-10.58	-0.018	7.64E-04	28.3	17.0		
3	44.50	-15.38	-0.019	6.70E-04	15.3	38.1		291880
		-22.82	-0.019	6.70E-04	15.3	38.1		
4	43.75	-17.45	-0.019	5.66E-04	0.2	42.5		291880
5	43.00	-14.67	-0.020	4.64E-04	-11.9	37.0		291880
6	42.50	-11.71	-0.020	4.07E-04	-18.5	29.1		291880
7	41.50	-13.70	-0.020	3.59E-04	-31.2	-0.3		291880
		-12.45	-0.020	3.59E-04	-31.2	-0.3		
8	41.10	-14.14	-0.020	3.69E-04	-36.5	-13.8	135.1	291880
		-14.14	-0.020	3.69E-04	98.7	-13.8		
9	40.55	-15.82	-0.021	3.47E-04	90.4	38.2		291880
10	40.00	-29.06	-0.021	2.31E-04	78.1	85.4		291880
11	39.00	-34.09	-0.021	1.66E-04	46.5	147.9		291880
12	38.60	-34.33	-0.021	3.79E-04	32.8	163.8		291880
13	38.50	-33.32	-0.021	4.36E-04	29.4	166.9		291880
14	37.75	-38.82	-0.020	8.78E-04	2.4	177.5		291880
15	37.00	-45.31	-0.019	1.32E-03	-29.2	167.0		291880
		-31.48	-0.019	1.32E-03	-29.2	167.0		
16	36.10	-51.80	-0.018	1.77E-03	-66.6	126.7	42.4	291880
		-51.80	-0.018	1.77E-03	-24.3	126.7		
17	35.60	-60.55	-0.017	1.97E-03	-52.4	108.4		291880
18	35.10	-64.04	-0.016	2.13E-03	-83.5	74.9		291880
		2.54	-0.016	2.13E-03	-83.5	74.9		
19	34.55	29.51	-0.015	2.23E-03	-74.7	29.3		291880

(continued)

Stage No.16 Remove strut or anchor no.1 at elevation 43.00

Node no.	Y coord	Nett pressure	Wall disp.	Wall rotation	Shear force	Bending moment	Prop forces	EI of wall
		kN/m2	m	rad.	kN/m	kN.m/m	kN/m	kN.m2/m
20	34.00	23.47	-0.013	-2.25E-03	-60.1	-7.3		291880
21	33.00	15.64	-0.011	-2.14E-03	-40.6	-55.8		291880
22	32.00	-1.29	-0.009	-1.89E-03	-33.4	-88.7		291880
		103.88	-0.009	-1.89E-03	-33.4	-88.7		
23	31.00	52.18	-0.007	-1.62E-03	44.6	-70.0		291880
24	30.00	-128.54	-0.006	-1.50E-03	6.4	0.0		0
25	29.90	0.22	-0.006	0	0.0	0.0		0
26	29.70	5.80	-0.006	0	0.6	0.0		0
27	26.85	-2.24	-0.005	0	5.7	0.0		0
28	24.00	-0.89	-0.003	0	1.2	0.0		0
29	20.00	0.27	-0.000	0	-0.0	0.0		---

At elev. 46.10 Prop force = 28.3 kN/m run
At elev. 41.10 Prop force = 135.1 kN/m run
At elev. 36.10 Prop force = 42.4 kN/m run

		LEFT side						
			Effective stresses				Total earth	Adjusted soil
Node no.	Y coord	Water press.	Vertic -al	Active limit	Passive limit	Earth press.	press.	modulus
		kN/m2	kN/m2	kN/m2	kN/m2	kN/m2	kN/m2	kN/m2
1	46.10	0.00	0.00	0.00	0.00	0.00	0.00	0.0
2	45.50	0.00	0.00	0.00	0.00	0.00	0.00	0.0
3	44.50	0.00	0.00	0.00	0.00	0.00	0.00	0.0
4	43.75	0.00	0.00	0.00	0.00	0.00	0.00	0.0
5	43.00	0.00	0.00	0.00	0.00	0.00	0.00	0.0
6	42.50	0.00	0.00	0.00	0.00	0.00	0.00	0.0
7	41.50	0.00	0.00	0.00	0.00	0.00	0.00	0.0
8	41.10	0.00	0.00	0.00	0.00	0.00	0.00	0.0
9	40.55	0.00	0.00	0.00	0.00	0.00	0.00	0.0
10	40.00	0.00	0.00	0.00	0.00	0.00	0.00	0.0
11	39.00	0.00	0.00	0.00	0.00	0.00	0.00	0.0
12	38.60	0.00	0.00	0.00	0.00	0.00	0.00	0.0
13	38.50	0.00	0.00	0.00	0.00	0.00	0.00	0.0
14	37.75	0.00	0.00	0.00	0.00	0.00	0.00	0.0
15	37.00	0.00	0.00	0.00	0.00	0.00	0.00	0.0
16	36.10	0.00	0.00	0.00	0.00	0.00	0.00	0.0
		0.00	0.00	0.00	0.00	0.00	0.00	149995
17	35.60	0.00	10.00	1.43	125.67	4.13	4.13	149995
18	35.10	4.50	15.50	2.21	194.80	1.08	5.58A	149995
		4.50	15.50	0.00	160.80	67.66	72.16	49998
19	34.55	9.45	21.00	0.00	193.16	94.65	104.10	49998
20	34.00	14.40	26.51	0.00	225.53	87.93	102.33	49998
21	33.00	23.40	36.53	0.00	284.45	80.00	103.40	49998
22	32.00	32.40	46.58	0.00	343.49	74.66	107.06	49998
		32.40	46.58	0.00	829.85	139.75	172.15	149995
23	31.00	41.40	57.65	0.00	922.60	93.36	134.76	149995
24	30.00	45.00	74.15	0.00	1060.85	21.83	66.83	149995
25	29.90	45.00	76.16	0.00	1077.70	76.34	121.34	149995
26	29.70	45.00	80.19	0.00	1111.43	81.13	126.13	149995
27	26.85	45.00	137.73	0.00	1593.57	106.67	151.67	149995
28	24.00	65.00	175.69	0.00	1911.55	123.04	188.04	149995
29	20.00	105.00	217.81	0.00	2264.41	137.88	242.88	149995

(continued)

Stage No.16 Remove strut or anchor no.1 at elevation 43.00

RIGHT side

Node no.	Y coord	Water press.	Effective stresses: Vertic -al	Active limit	Passive limit	Earth press.	Total earth press.	Adjusted soil modulus
		kN/m2	kN/m2	kN/m2	kN/m2	kN/m2	kN/m2	kN/m2
1	46.10	0.00	0.00	0.00	0.00	0.00	0.00	0.0
2	45.50	0.00	0.00	0.00	0.00	0.00	0.00	0.0
		0.00	0.00	0.00	10.58	10.58	10.58p	9999
3	44.50	0.00	21.35	4.04	91.98	15.38	15.38	9999
		0.00	21.35	0.15	107.85	22.82	22.82	19999
4	43.75	0.00	35.07	4.41	160.14	17.45	17.45	19999
5	43.00	0.00	48.58	8.60	211.63	14.67	14.67	19999
6	42.50	0.00	57.53	11.38	245.75	11.71	11.71	19999
7	41.50	0.00	75.36	16.92	313.73	13.70	13.70A	19999
		0.00	75.36	15.29	351.58	12.45	12.45A	19999
8	41.10	0.00	82.48	17.32	382.10	14.14	14.14A	19999
9	40.55	0.00	92.26	20.11	424.05	15.82	15.82A	19999
10	40.00	0.00	102.04	22.90	466.00	29.06	29.06	19999
11	39.00	0.00	119.84	27.97	542.29	34.09	34.09	19999
12	38.60	0.00	126.96	30.00	572.83	34.33	34.33	19999
13	38.50	1.00	127.74	30.22	576.18	32.32	33.32	19999
14	37.75	8.50	133.60	31.89	601.32	30.32	38.82A	19999
15	37.00	16.00	139.48	33.57	626.50	29.31	45.31A	19999
		16.00	139.48	20.92	889.64	15.48	31.48A	49997
16	36.10	25.00	147.44	22.74	936.43	26.80	51.80	49997
17	35.60	30.00	151.86	23.75	962.46	34.67	64.67	49997
18	35.10	35.00	156.29	24.77	988.50	34.62	69.62	49997
19	34.55	40.50	161.17	25.88	1017.16	34.09	74.59	49997
20	34.00	46.00	166.05	27.00	1045.84	32.86	78.86	49997
21	33.00	56.00	174.92	29.03	1098.01	31.76	87.76	49997
22	32.00	66.00	183.80	31.06	1150.23	42.35	108.35	49997
		66.00	183.80	0.00	1979.55	2.27	68.27	149992
23	31.00	76.00	193.69	0.00	2062.38	6.58	82.58	149992
24	30.00	86.00	203.58	0.00	2145.25	109.36	195.36	149992
25	29.90	87.00	204.57	0.00	2153.54	34.12	121.12	149992
26	29.70	89.00	206.55	0.00	2170.12	31.32	120.32	149992
27	26.85	117.50	234.77	0.00	2406.52	36.41	153.91	149992
28	24.00	146.00	263.01	0.00	2643.17	42.92	188.92	149992
29	20.00	186.00	302.71	6.36	2975.71	56.61	242.61	149992

Legend: 12.34 a Soil pressure at active limit
10.58 p Soil pressure at passive limit
31.48 A Arching - soil pressure below active limit

Units: kN,m

Stage No.16 Remove prop no.1 at elev. 43.00

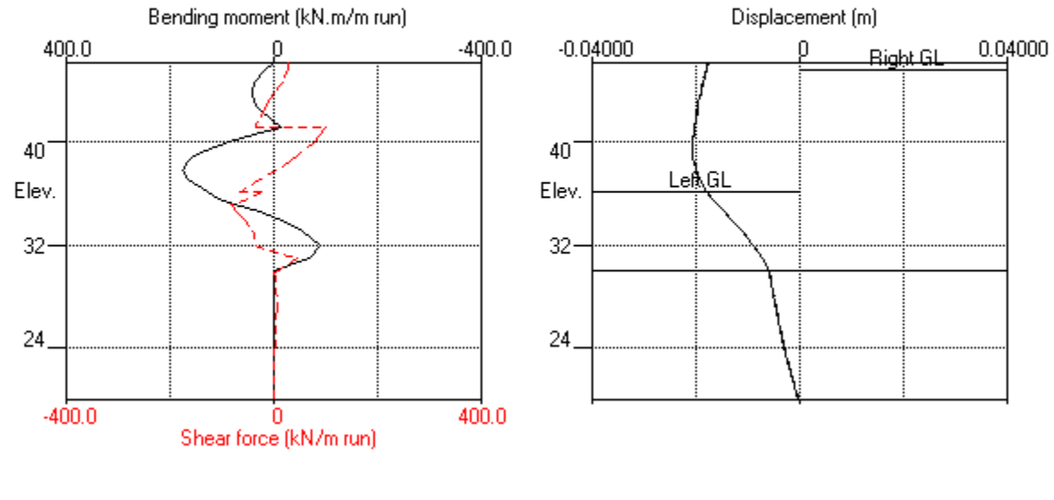

Stage No.16 Remove prop no.1 at elev. 43.00

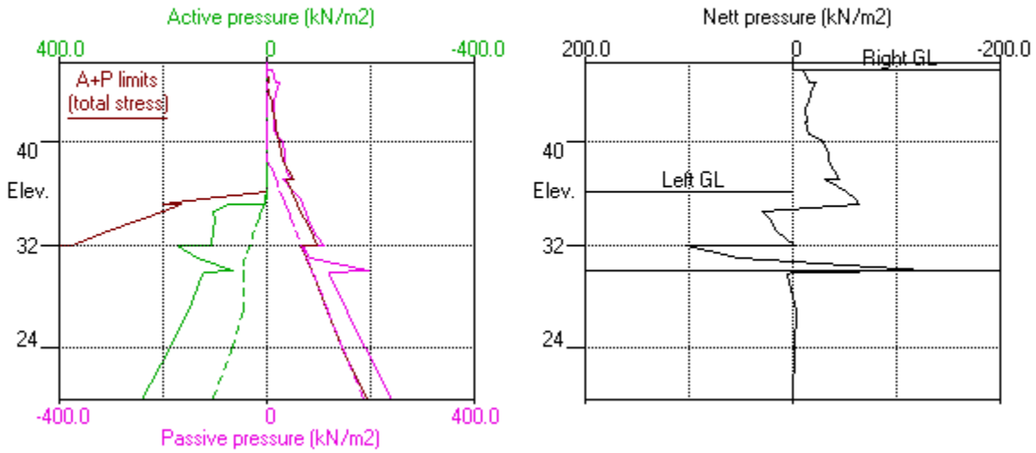

Units: kN,m

Stage No.17 Change EI of wall to 194590kN.m2/m run

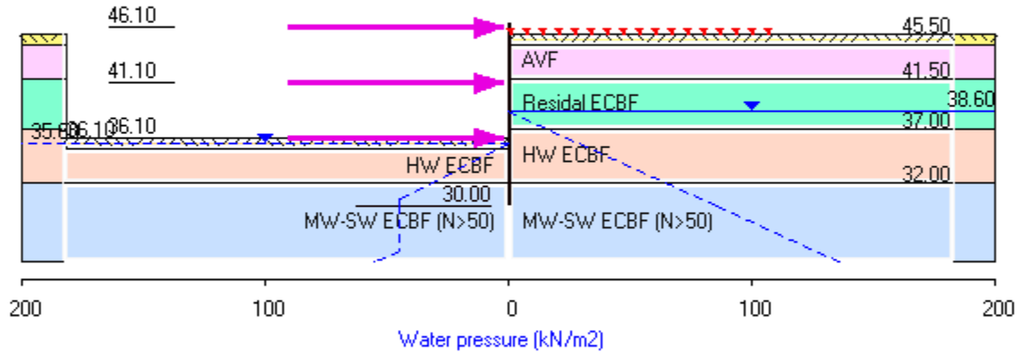

TONKIN + TAYLOR LTD | Sheet No.
Program: WALLAP Version 6.09 Revision A61.B78.R61 | Job No.
Licensed from GEOSOLVE | Made by :
Data filename/Run ID: 20261027_UoA_Section1_Prop_DeflectionEnvelope
New data set - contains default parameters | Date:28-10-2026
Please modify / add | Checked :

Units: kN,m

Stage No. 17 Change EI of wall to 194590 kN.m2/m run
Allow wall to relax with new modulus value

STABILITY ANALYSIS of Fully Embedded Wall according to Strength Factor method
Factor of safety on soil strength

Stage No.	Ground level Act.	Ground level Pass.	Prop Elev.	Factor of Safety	Moment equilib. at elev.	Toe elev.	Wall Penetr -ation	Direction of failure
			FoS for toe elev. = 30.00			**Toe elev. for FoS = 1.500**		
17	36.10	45.50	More than one prop. No FoS calc.					

BENDING MOMENT and DISPLACEMENT ANALYSIS of Fully Embedded Wall
Analysis options
2-D finite element model. Active limit arching modelled.
Soil deformations are elastic until the active or passive limit is reached
Open Tension Crack analysis - No

Length of wall perpendicular to section = 1000.00m
Rigid boundaries: Left side 40.00m from wall Rough
Right side 40.00m from wall Rough
Lower boundary at elevation 20.00m Rough
Soil-wall interface Smooth

*** Wall displacements reset to zero at stage 3

Warnings concerning changes to wall stiffness
have been ignored. Please review the calculated bending moments
for unexpected values and read the Help Topic

Node no.	Y coord	Nett pressure kN/m2	Wall disp. m	Wall rotation rad.	Shear force kN/m	Bending moment kN.m/m	Prop forces kN/m	EI of wall kN.m2/m
1	46.10	0.00	-0.018	8.19E-04	24.6	0.0	24.6	194590
2	45.50	0.00	-0.018	7.96E-04	24.6	15.3		194590
		-10.58	-0.018	7.96E-04	24.6	15.3		
3	44.50	-15.29	-0.019	6.75E-04	11.7	33.8		194590
		-22.66	-0.019	6.75E-04	11.7	33.8		
4	43.75	-17.30	-0.019	5.47E-04	-3.3	36.1		194590
5	43.00	-14.75	-0.020	4.31E-04	-15.3	28.7		194590
6	42.50	-12.17	-0.020	3.77E-04	-22.1	19.4		194590
7	41.50	-14.48	-0.020	3.80E-04	-35.4	-12.9		194590
		-13.23	-0.020	3.80E-04	-35.4	-12.9		
8	41.10	-14.92	-0.020	4.32E-04	-41.0	-27.7	132.5	194590
		-14.92	-0.020	4.32E-04	91.5	-27.7		
9	40.55	-16.14	-0.021	4.56E-04	83.0	21.2		194590
10	40.00	-28.55	-0.021	3.52E-04	70.7	65.4		194590
11	39.00	-32.85	-0.021	-8.94E-05	40.0	122.5		194590
12	38.60	-32.67	-0.021	-3.36E-04	26.9	136.4		194590
13	38.50	-31.53	-0.021	-4.02E-04	23.7	139.1		194590
14	37.75	-36.99	-0.020	-9.16E-04	-2.0	147.0		194590
15	37.00	-43.96	-0.019	-1.41E-03	-32.4	134.5		194590
		-28.11	-0.019	-1.41E-03	-32.4	134.5		
16	36.10	-50.06	-0.018	-1.89E-03	-67.6	93.0	59.9	194590
		-50.06	-0.018	-1.89E-03	-7.7	93.0		
17	35.60	-56.11	-0.017	-2.09E-03	-34.3	81.0		194590
18	35.10	-64.70	-0.016	-2.24E-03	-64.5	54.7		194590
		2.06	-0.016	-2.24E-03	-64.5	54.7		

Run ID. 20261027_UoA_Section1_Prop_DeflectionEnvelope | Sheet No.
New data set - contains default parameters | Date:28-10-2026
Please modify / add | Checked :

(continued)

Stage No.17 Change EI of wall to 194590 kN.m2/m run
Allow wall to relax with new modulus value

Node no.	Y coord	Nett pressure kN/m2	Wall disp. m	Wall rotation rad.	Shear force kN/m	Bending moment kN.m/m	Prop forces kN/m	EI of wall kN.m2/m
19	34.55	26.96	-0.015	-2.33E-03	-56.5	16.9		194590
20	34.00	19.07	-0.013	-2.33E-03	-43.8	-12.5		194590
21	33.00	9.76	-0.011	-2.17E-03	-29.4	-50.4		194590
22	32.00	-7.13	-0.009	-1.85E-03	-28.1	-77.1		194590
		86.36	-0.009	-1.85E-03	-28.1	-77.1		
23	31.00	43.61	-0.007	-1.52E-03	36.9	-61.0		194590
24	30.00	-106.71	-0.006	-1.37E-03	5.3	0.0		0
25	29.90	0.22	-0.006	0	0.0	0.0		0
26	29.70	5.80	-0.006	0	0.6	0.0		0
27	26.85	-2.24	-0.005	0	5.7	0.0		0
28	24.00	-0.89	-0.003	0	1.2	0.0		0
29	20.00	0.27	-0.000	0	-0.0	0.0		---

At elev. 46.10 Prop force = 24.6 kN/m run
At elev. 41.10 Prop force = 132.5 kN/m run
At elev. 36.10 Prop force = 59.9 kN/m run

LEFT side

Node no.	Y coord	Water press. kN/m2	Effective stresses: Vertic -al kN/m2	Active limit kN/m2	Passive limit kN/m2	Earth press. kN/m2	Total earth press. kN/m2	Adjusted soil modulus kN/m2
1	46.10	0.00	0.00	0.00	0.00	0.00	0.00	0.0
2	45.50	0.00	0.00	0.00	0.00	0.00	0.00	0.0
3	44.50	0.00	0.00	0.00	0.00	0.00	0.00	0.0
4	43.75	0.00	0.00	0.00	0.00	0.00	0.00	0.0
5	43.00	0.00	0.00	0.00	0.00	0.00	0.00	0.0
6	42.50	0.00	0.00	0.00	0.00	0.00	0.00	0.0
7	41.50	0.00	0.00	0.00	0.00	0.00	0.00	0.0
8	41.10	0.00	0.00	0.00	0.00	0.00	0.00	0.0
9	40.55	0.00	0.00	0.00	0.00	0.00	0.00	0.0
10	40.00	0.00	0.00	0.00	0.00	0.00	0.00	0.0
11	39.00	0.00	0.00	0.00	0.00	0.00	0.00	0.0
12	38.60	0.00	0.00	0.00	0.00	0.00	0.00	0.0
13	38.50	0.00	0.00	0.00	0.00	0.00	0.00	0.0
14	37.75	0.00	0.00	0.00	0.00	0.00	0.00	0.0
15	37.00	0.00	0.00	0.00	0.00	0.00	0.00	0.0
16	36.10	0.00	0.00	0.00	0.00	0.00	0.00	0.0
		0.00	0.00	0.00	0.00	0.00	0.00	149995
17	35.60	0.00	10.00	1.43	125.67	8.06	8.06	149995
18	35.10	4.50	15.50	2.21	194.80	0.81	5.31A	149995
		4.50	15.50	0.00	160.80	67.57	72.07	49998
19	34.55	9.45	21.00	0.00	193.16	93.43	102.88	49998
20	34.00	14.40	26.51	0.00	225.53	85.81	100.21	49998
21	33.00	23.40	36.53	0.00	284.45	77.13	100.53	49998
22	32.00	32.40	46.58	0.00	343.49	71.78	104.18	49998
		32.40	46.58	0.00	829.85	131.10	163.50	149995
23	31.00	41.40	57.65	0.00	922.60	89.15	130.55	149995
24	30.00	45.00	74.15	0.00	1060.85	32.80	77.80	149995
25	29.90	45.00	76.16	0.00	1077.70	76.34	121.34	149995
26	29.70	45.00	80.19	0.00	1111.43	81.12	126.12	149995
27	26.85	45.00	137.73	0.00	1593.57	106.66	151.66	149995
28	24.00	65.00	175.69	0.00	1911.55	123.03	188.03	149995
29	20.00	105.00	217.81	0.00	2264.41	137.88	242.88	149995

(continued)

Stage No.17 Change EI of wall to 194590 kN.m2/m run
Allow wall to relax with new modulus value

RIGHT side

Node no.	Y coord	Effective stresses: Water press.	Vertic -al	Active limit	Passive limit	Earth press.	Total earth press.	Adjusted soil modulus
		kN/m2	kN/m2	kN/m2	kN/m2	kN/m2	kN/m2	kN/m2
1	46.10	0.00	0.00	0.00	0.00	0.00	0.00	0.0
2	45.50	0.00	0.00	0.00	0.00	0.00	0.00	0.0
		0.00	0.00	0.00	10.58	10.58	10.58p	9999
3	44.50	0.00	21.35	4.04	91.98	15.29	15.29	9999
		0.00	21.35	0.15	107.85	22.66	22.66	19999
4	43.75	0.00	35.07	4.41	160.14	17.30	17.30	19999
5	43.00	0.00	48.58	8.60	211.63	14.75	14.75	19999
6	42.50	0.00	57.53	11.38	245.75	12.17	12.17	19999
7	41.50	0.00	75.36	16.92	313.73	14.48	14.48A	19999
		0.00	75.36	15.29	351.58	13.23	13.23A	19999
8	41.10	0.00	82.48	17.32	382.10	14.92	14.92A	19999
9	40.55	0.00	92.26	20.11	424.05	16.14	16.14A	19999
10	40.00	0.00	102.04	22.90	466.00	28.55	28.55	19999
11	39.00	0.00	119.84	27.97	542.29	32.85	32.85	19999
12	38.60	0.00	126.96	30.00	572.83	32.67	32.67	19999
13	38.50	1.00	127.74	30.22	576.18	30.53	31.53	19999
14	37.75	8.50	133.60	31.89	601.32	28.49	36.99A	19999
15	37.00	16.00	139.48	33.57	626.50	27.96	43.96A	19999
		16.00	139.48	20.92	889.64	12.11	28.11A	49997
16	36.10	25.00	147.44	22.74	936.43	25.06	50.06	49997
17	35.60	30.00	151.86	23.75	962.46	34.17	64.17	49997
18	35.10	35.00	156.29	24.77	988.50	35.01	70.01	49997
19	34.55	40.50	161.17	25.88	1017.16	35.42	75.92	49997
20	34.00	46.00	166.05	27.00	1045.84	35.15	81.15	49997
21	33.00	56.00	174.92	29.03	1098.01	34.77	90.77	49997
22	32.00	66.00	183.80	31.06	1150.23	45.31	111.31	49997
		66.00	183.80	0.00	1979.55	11.14	77.14	149992
23	31.00	76.00	193.69	0.00	2062.38	10.94	86.94	149992
24	30.00	86.00	203.58	0.00	2145.25	98.51	184.51	149992
25	29.90	87.00	204.57	0.00	2153.54	34.12	121.12	149992
26	29.70	89.00	206.55	0.00	2170.12	31.32	120.32	149992
27	26.85	117.50	234.77	0.00	2406.52	36.41	153.91	149992
28	24.00	146.00	263.01	0.00	2643.17	42.92	188.92	149992
29	20.00	186.00	302.71	6.36	2975.71	56.61	242.61	149992

Legend: 12.34 a Soil pressure at active limit
10.58 p Soil pressure at passive limit
28.11 A Arching - soil pressure below active limit

Units: kN,m

Stage No.17 Change EI of wall to 194590kN.m2/m run

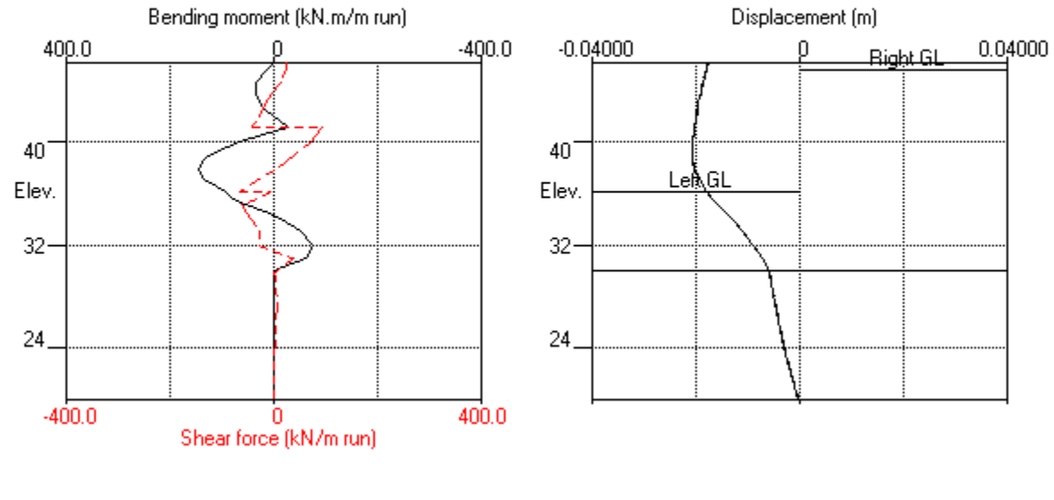

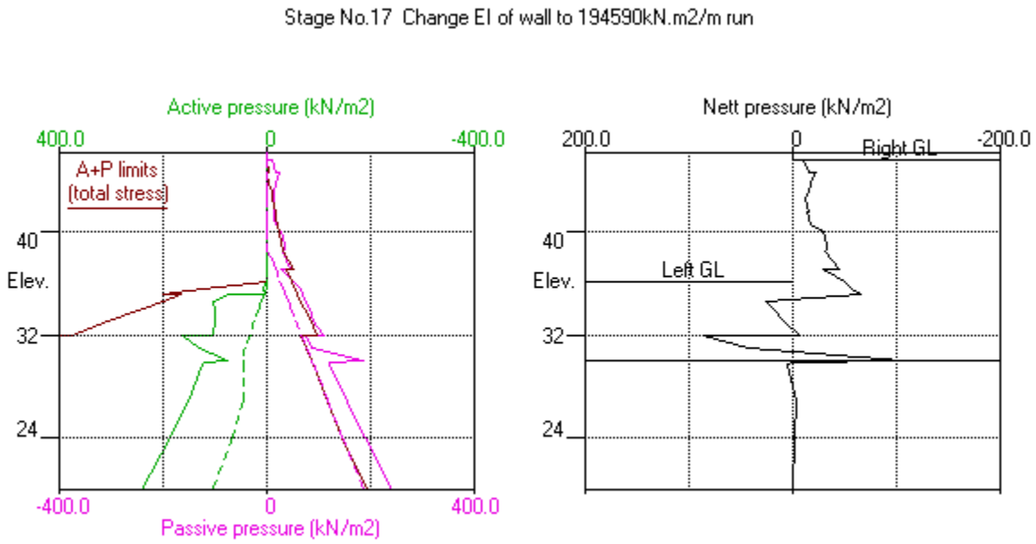

Units: kN,m

Summary of results

STABILITY ANALYSIS of Fully Embedded Wall according to Strength Factor method
Factor of safety on soil strength

Stage No.	Ground level Act.	Pass.	Prop Elev.	FoS for toe elev. = 30.00 Factor of Safety	Moment equilib. at elev.	Toe elev. for FoS = 1.500 Toe elev.	Wall Penetr -ation	Direction of failure
1	45.50	45.50	Cant.	Conditions not suitable for FoS calc.				
2	45.50	45.50	Cant.	Conditions not suitable for FoS calc.				
3	45.50	45.50		No analysis at this stage				
4	45.50	45.50		No analysis at this stage				
5	45.50	42.50	Cant.	1.814	30.92	33.71	8.79	R to L
6	42.50	45.50		No analysis at this stage				
7	45.50	38.50	43.00	2.832	n/a	32.52	5.98	R to L
8	38.50	45.50		No analysis at this stage				

All remaining stages have more than one prop - FoS calculation n/a

TONKIN + TAYLOR LTD | Sheet No.
Program: WALLAP Version 6.09 Revision A61.B78.R61 | Job No.
Licensed from GEOSOLVE | Made by :
Data filename/Run ID: 20261027_UoA_Section1_Prop_DeflectionEnvelope
New data set - contains default parameters | Date:28-10-2026
Please modify / add | Checked :

Units: kN,m

Summary of results

BENDING MOMENT and DISPLACEMENT ANALYSIS of Fully Embedded Wall

Analysis options

2-D finite element model. Active limit arching modelled.
Soil deformations are elastic until the active or passive limit is reached
Open Tension Crack analysis - No

Length of wall perpendicular to section = 1000.00m

Rigid boundaries:	Left side 40.00m from wall	Rough
	Right side 40.00m from wall	Rough
	Lower boundary at elevation 20.00m	Rough
	Soil-wall interface	Smooth

Warnings concerning changes to wall stiffness

have been ignored. Please review the calculated bending moments
for unexpected values and read the Help Topic

Bending moment, shear force and displacement envelopes

Node no.	Y coord	Displacement maximum	Displacement minimum	Bending moment maximum	Bending moment minimum	Shear force maximum	Shear force minimum
		m	m	kN.m/m	kN.m/m	kN/m	kN/m
1	46.10	0.000	-0.021	0.0	-0.0	28.3	0.0
2	45.50	0.000	-0.020	17.0	-0.0	28.3	0.0
3	44.50	0.000	-0.019	38.1	-7.1	15.3	-13.2
4	43.75	0.000	-0.019	42.5	-24.3	0.2	-29.8
5	43.00	0.000	-0.020	37.0	-53.1	92.9	-44.5
6	42.50	0.000	-0.020	29.1	-26.7	87.1	-22.1
7	41.50	0.000	-0.020	77.5	-29.9	73.1	-35.4
8	41.10	0.000	-0.020	105.4	-30.7	98.7	-41.0
9	40.55	0.000	-0.021	138.6	-28.7	90.4	0.0
10	40.00	0.000	-0.021	164.4	-24.0	78.1	0.0
11	39.00	0.000	-0.021	176.5	-13.7	120.5	-42.6
12	38.60	0.000	-0.021	178.9	-10.9	96.9	-37.8
13	38.50	0.000	-0.021	181.3	-10.4	91.0	-44.1
14	37.75	0.000	-0.020	186.6	-11.2	47.2	-70.0
15	37.00	0.000	-0.020	200.3	-21.4	4.5	-85.4
16	36.10	0.000	-0.018	182.8	-29.4	0.3	-72.1
17	35.60	0.000	-0.018	156.3	-28.5	3.2	-75.1
18	35.10	0.000	-0.016	113.3	-41.6	4.3	-107.8
19	34.55	0.000	-0.015	57.0	-52.7	3.1	-96.4
20	34.00	0.000	-0.014	10.3	-58.4	0.5	-78.9
21	33.00	0.000	-0.011	0.0	-64.6	0.0	-54.9
22	32.00	0.000	-0.009	0.0	-101.2	0.0	-41.4
23	31.00	0.000	-0.007	0.0	-77.5	49.6	0.0
24	30.00	0.000	-0.006	0.0	-0.0	7.0	0.0
25	29.90	0.000	-0.006	0.0	0.0	0.0	-0.0
26	29.70	0.000	-0.006	0.0	0.0	0.6	-0.0
27	26.85	0.000	-0.005	0.0	0.0	5.7	-0.3
28	24.00	0.000	-0.003	0.0	0.0	1.2	-0.5
29	20.00	0.000	-0.000	0.0	0.0	0.0	-0.0

Summary of results (continued)

Maximum and minimum bending moment and shear force at each stage

Stage no.	Bending moment maximum kN.m/m	elev.	minimum kN.m/m	elev.	Shear force maximum kN/m	elev.	minimum kN/m	elev.
1	0.4	40.00	-0.4	37.00	0.5	42.50	-0.6	37.75
2	0.5	39.00	-0.6	37.00	0.5	42.50	-0.8	37.75
3	No calculation at this stage							
4	No calculation at this stage							
5	0.0	46.10	-33.7	32.00	15.9	31.00	-21.0	37.00
6	No calculation at this stage							
7	176.5	39.00	-76.4	32.00	92.9	43.00	-85.4	37.00
8	No calculation at this stage							
9	198.9	37.00	-97.6	32.00	120.5	39.00	-103.2	35.10
10	200.3	37.00	-101.2	32.00	118.1	39.00	-107.8	35.10
11	170.6	37.00	-87.3	32.00	85.5	39.00	-94.0	35.10
12	No calculation at this stage							
13	No calculation at this stage							
14	186.6	37.75	-89.1	32.00	89.1	41.10	-83.4	35.10
15	No calculation at this stage							
16	177.5	37.75	-88.7	32.00	98.7	41.10	-83.5	35.10
17	147.0	37.75	-77.1	32.00	91.5	41.10	-67.6	36.10

Maximum and minimum displacement at each stage

Stage no.	Displacement maximum m	elev.	minimum m	elev.	Stage description
1	0.000	46.10	-0.000	41.10	Apply surcharge no.1 at elev. 45.50
2	0.000	46.10	-0.001	42.50	Apply surcharge no.2 at elev. 45.50
3	Wall displacements reset to zero Change EI of wall to 291880kN.m2/m run				
4	No calculation at this stage				Apply water pressure profile no.1
5	0.000	46.10	-0.021	46.10	Excav. to elev. 42.50 on LEFT side
6	No calculation at this stage				Install prop no.1 at elev. 43.00
7	0.000	46.10	-0.020	41.10	Excav. to elev. 38.50 on LEFT side
8	No calculation at this stage				Install prop no.2 at elev. 39.00
9	0.000	46.10	-0.021	39.00	Excav. to elev. 35.10 on LEFT side
10	0.000	46.10	-0.021	39.00	Fill to elev. 36.10 on LEFT side
11	0.000	46.10	-0.020	40.00	Apply water pressure profile no.3
12	No calculation at this stage				Install prop no.4 at elev. 36.10
13	No calculation at this stage				Install prop no.3 at elev. 41.10
14	0.000	46.10	-0.021	39.00	Remove prop no.2 at elev. 39.00
15	No calculation at this stage				Install prop no.5 at elev. 46.10
16	0.000	46.10	-0.021	39.00	Remove prop no.1 at elev. 43.00
17	0.000	46.10	-0.021	39.00	Change EI of wall to 194590kN.m2/m run

Run ID. 20261027_UoA_Section1_Prop_DeflectionEnvelope | Sheet No.
New data set - contains default parameters | Date:28-10-2026
Please modify / add | Checked :

Summary of results (continued)

Prop forces at each stage (horizontal components)

Stage no.	Strut no. 1 at elev. 43.00 kN/m run	kN/prop	Strut no. 2 at elev. 39.00 kN/m run	kN/prop	Strut no. 3 at elev. 41.10 kN/m run	kN/prop
7	125.47	602.24	---	---	---	---
9	122.31	587.10	163.07	782.73	---	---
10	122.46	587.81	158.75	762.02	---	---
11	107.47	515.85	102.61	492.51	---	---
14	102.46	491.80	---	---	59.97	59.97
16	---	---	---	---	135.13	135.13
17	---	---	---	---	132.51	132.51

Stage no.	Strut no. 4 at elev. 36.10 kN/m run	kN/prop	Strut no. 5 at elev. 46.10 kN/m run	kN/prop
14	47.19	47.19	---	---
16	42.35	42.35	28.27	28.27
17	59.87	59.87	24.61	24.61

TONKIN + TAYLOR LTD | Sheet No.
Program: WALLAP Version 6.09 Revision A61.B78.R61 | Job No.
Licensed from GEOSOLVE | Made by :
Data filename/Run ID: 20261027_UoA_Section1_Prop_DeflectionEnvelope
New data set - contains default parameters | Date:28-10-2026
Please modify / add | Checked :

Units: kN,m

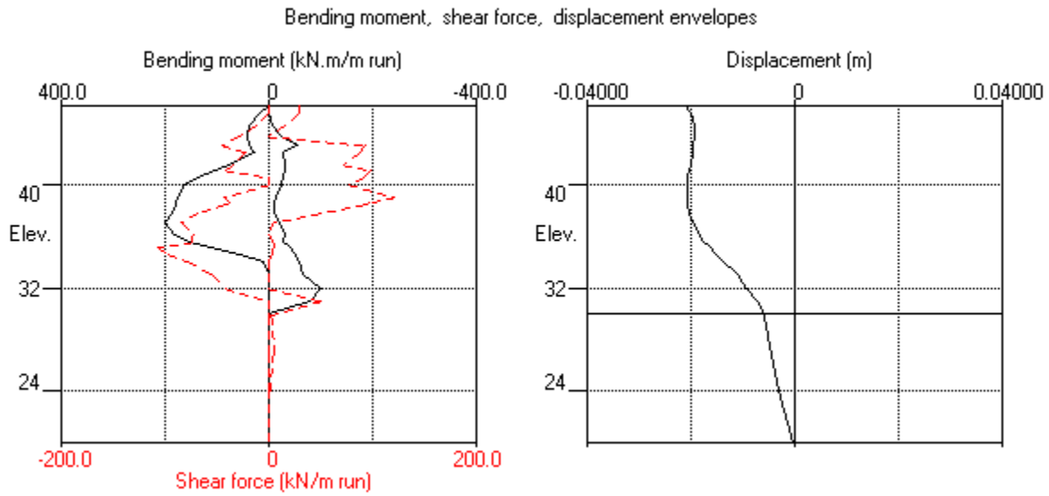

TONKIN + TAYLOR LTD | Sheet No.
Program: WALLAP Version 6.09 Revision A61.B78.R61 | Job No.
Licensed from GEOSOLVE | Made by :
Data filename/Run ID: 20261027_UoA_Section2_Anc_DeflectionEnvelope
New data set - contains default parameters | Date:28-10-2026
Please modify / add | Checked :

Units: kN,m

INPUT DATA

SOIL PROFILE

Stratum no.	Elevation of top of stratum	Soil types Left side	Right side
1	45.50	6 AVF	6 AVF
2	39.20	2 Residal ECBF	2 Residal ECBF
3	35.40	3 HW ECBF	3 HW ECBF
4	34.70	4 MW-SW ECBF (N>50)	4 MW-SW ECBF (N>50)

SOIL PROPERTIES

No.	Soil type Description	Bulk density kN/m3	Young's Modulus Eh,kN/m2	At rest coeff. Ko	Consol state.	Active limit Ka	Passive limit Kp	Cohesion kN/m2
	(Datum elev.)		(dEh/dy)	(dKo/dy)	(Nu)	(Kac)	(Kpc)	(dc/dy)
1	Fill	17.00	10000	0.530	OC	0.311	3.812	2.000d
				(0.300)		(1.297)	(5.289)	
2	Residal ECBF	18.00	20000	0.500	OC	0.285	4.288	5.000d
				(0.300)		(1.238)	(5.694)	
3	HW ECBF	19.00	50000	0.430	OC	0.229	5.879	10.00d
				(0.250)		(1.101)	(6.968)	
4	MW-SW ECBF (N>50)	20.00	150000	0.360	OC	0.182	8.378	50.00d
				(0.250)		(0.975)	(8.793)	
5	Structural fill	20.00	150000	0.290	OC	0.143	12.57	0.0d
				(0.200)		(0.857)	(11.567)	
6	AVF	18.00	20000	0.530	OC	0.311	3.812	5.000d
				(0.300)		(1.297)	(5.289)	

Additional soil parameters associated with Ka and Kp

No.	Soil type Description	--- parameters for Ka --- Soil friction angle	Wall adhesion coeff.	Back-fill angle	--- parameters for Kp --- Soil friction angle	Wall adhesion coeff.	Back-fill angle
1	Fill	28.00	0.639	0.00	28.00	0.469	0.00
2	Residal ECBF	30.00	0.634	0.00	30.00	0.464	0.00
3	HW ECBF	35.00	0.619	0.00	35.00	0.450	0.00
4	MW-SW ECBF (N>50)	40.00	0.602	0.00	40.00	0.434	0.00
5	Structural fill	45.00	0.581	0.00	45.00	0.414	0.00
6	AVF	28.00	0.639	0.00	28.00	0.469	0.00

GROUND WATER CONDITIONS

Density of water = 10.00 kN/m3
Initial water pressure profile = Profile number 5

Automatic water pressure balancing at toe of wall : No

Water press. profile no.	Left side Point no.	Elev. m	Piezo elev. m	Water press. kN/m2	Right side Point no.	Elev. m	Piezo elev. m	Water press. kN/m2
1	1	35.10	35.10	0.0	1	38.60	38.60	0.0
	2	30.10	34.60	45.0	2	34.10	38.60	45.0
	3	26.10	30.60	45.0	3	26.10	30.60	45.0
2	1	38.00	38.00	0.0	1	41.70	41.70	0.0
	2	33.50	38.00	45.0	2	37.20	41.70	45.0
	3	21.00	25.50	45.0	3	21.00	25.50	45.0
3	1	35.60	35.60	0.0	1	41.70	41.70	0.0
	2	30.60	35.10	45.0	2	37.20	41.70	45.0
	3	26.00	30.50	45.0	3	26.00	30.50	45.0
4	Not defined							
5	1	41.70	41.70	0.0	1	41.70	41.70	0.0
	2	37.20	41.70	45.0	2	37.20	41.70	45.0
	3	26.00	30.50	45.0	3	26.00	30.50	45.0

WALL PROPERTIES

Type of structure = Fully Embedded Wall
Elevation of toe of wall = 32.70
Maximum finite element length = 0.80 m
Youngs modulus of wall E = 2.9000E+07 kN/m2
Moment of inertia of wall I = 0.013420 m4/m run
E.I = 389180 kN.m2/m run
Yield Moment of wall = Not defined

STRUTS and ANCHORS

Prop no.	Elev.	Prop spacing m	Cross-section area sq.m	Youngs modulus kN/m2	Free length m	Inclin -ation (degs)	Pre-stress /prop kN	Strut or Anchor	tension ?	L/R
1	43.00	4.80	0.001863	2.000E+08	15.00	45.00	850.0	Anchor	n/a	L
2	39.00	4.80	0.001863	2.000E+08	10.00	45.00	850.0	Anchor	n/a	L
3	41.10	1.00	0.150000	3.000E+07	20.00	0.00	0	Strut	No	L
4	36.10	1.00	0.150000	3.000E+07	20.00	0.00	0	Strut	No	L
5	46.10	1.00	0.150000	3.000E+07	20.00	0.00	0	Strut	No	L

SURCHARGE LOADS

Surcharge no.	Elev.	Distance from wall	Length parallel to wall	Width perpend. to wall	Surcharge(kN/m2) Near edge	Far edge	Soil Cat.	type	Part fact.	Short Q reduc. fact.
1	45.50	-7.00(R)	20.00	15.00	12.00	=	--	--	--	--
2	Not defined									
3	45.50	-0.10(R)	20.00	6.90	5.00	=	--	--	--	--

Note: L = Left side, R = Right side

CONSTRUCTION STAGES

Construction stage no.	Stage description
1	Apply surcharge no.1 at elevation 45.50
2	Apply surcharge no.3 at elevation 45.50
3	Change EI of wall to 291880 kN.m2/m run Reset wall displacements to zero at this stage
4	Excavate to elevation 42.50 on LEFT side
5	Install strut or anchor no.1 at elevation 43.00
6	Excavate to elevation 38.00 on LEFT side
7	Apply water pressure profile no.2
8	Install strut or anchor no.2 at elevation 39.00
9	Apply water pressure profile no.1
10	Excavate to elevation 35.10 on LEFT side
11	Fill to elevation 36.10 on LEFT side with soil type 5
12	Install strut or anchor no.4 at elevation 36.10
13	Install strut or anchor no.3 at elevation 41.10
14	Remove strut or anchor no.2 at elevation 39.00
15	Install strut or anchor no.5 at elevation 46.10
16	Remove strut or anchor no.1 at elevation 43.00
17	Change EI of wall to 194590 kN.m2/m run Allow wall to relax with new modulus value

FACTORS OF SAFETY and ANALYSIS OPTIONS

Stability analysis:
Method of analysis - Strength Factor method
Factor on soil strength for calculating wall depth = 1.50

Parameters for undrained strata:
Minimum equivalent fluid density = 5.00 kN/m3
Maximum depth of water filled tension crack = 0.00 m

Bending moment and displacement calculation:
Method - 2-D finite element model
Open Tension Crack analysis? - No
Active limit arching modelled? - Yes
Non-linear Modulus Parameter (L) = 12.80 m

Boundary conditions:
Length of wall (normal to plane of analysis) = 1000.00 m

Width of excavation/fill on Left side of wall = 40.00 m
Width of excavation/fill on Right side of wall = 40.00 m

Distance to rigid boundary on Left side = 40.00 m
Distance to rigid boundary on Right side = 40.00 m
Elevation of rigid lower boundary = 20.00

Lower rigid boundary at elevation 20.00 - Rough
Rigid boundary on Left side - Rough
Rigid boundary on Right side - Rough
Soil-wall interface - Smooth

OUTPUT OPTIONS

Stage no.	Stage description	Displacement Bending mom. Shear force	Active, Passive pressures	Graph. output
1	Apply surcharge no.1 at elev. 45.50	Yes	Yes	Yes
2	Apply surcharge no.3 at elev. 45.50	Yes	Yes	Yes
3	Change EI of wall to 291880kN.m2/m run	No	No	No
4	Excav. to elev. 42.50 on LEFT side	Yes	Yes	Yes
5	Install prop no.1 at elev. 43.00	Yes	Yes	Yes
6	Excav. to elev. 38.00 on LEFT side	Yes	Yes	Yes
7	Apply water pressure profile no.2	Yes	Yes	Yes
8	Install prop no.2 at elev. 39.00	Yes	Yes	Yes
9	Apply water pressure profile no.1	Yes	Yes	Yes
10	Excav. to elev. 35.10 on LEFT side	Yes	Yes	Yes
11	Fill to elev. 36.10 on LEFT side	No	No	No
12	Install prop no.4 at elev. 36.10	Yes	Yes	Yes
13	Install prop no.3 at elev. 41.10	Yes	Yes	Yes
14	Remove prop no.2 at elev. 39.00	Yes	Yes	Yes
15	Install prop no.5 at elev. 46.10	Yes	Yes	Yes
16	Remove prop no.1 at elev. 43.00	Yes	Yes	Yes
17	Change EI of wall to 194590kN.m2/m run	No	No	No
*	Summary output	Yes	-	Yes

Program WALLAP - Copyright (C) 2026 by DL Borin, distributed by GEOSOLVE
150 St. Alphonsus Road, London SW4 7BW, UK www.geosolve.co.uk

Units: kN,m

Stage No.4 Excav. to elev. 42.50 on LEFT side

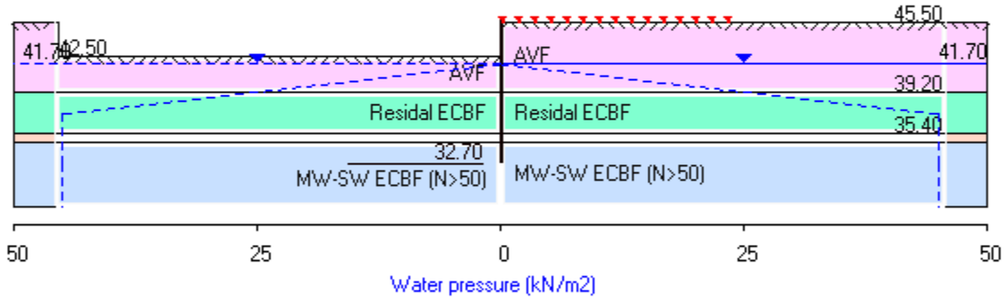

TONKIN + TAYLOR LTD | Sheet No.
Program: WALLAP Version 6.09 Revision A61.B78.R61 | Job No.
Licensed from GEOSOLVE | Made by :
Data filename/Run ID: 20261027_UoA_Section2_Anc_DeflectionEnvelope
New data set - contains default parameters | Date:28-10-2026
Please modify / add | Checked :

Units: kN,m

Stage No. 4 Excavate to elevation 42.50 on LEFT side

STABILITY ANALYSIS of Fully Embedded Wall according to Strength Factor method
Factor of safety on soil strength

Stage No.	Ground level Act.	Ground level Pass.	Prop Elev.	FoS for toe elev. = 32.70 Factor of Safety	Moment equilib. at elev.	Toe elev. for FoS = 1.500 Toe elev.	Wall Penetr -ation	Direction of failure
4	45.50	42.50	Cant.	2.640	33.62	38.95	3.55	R to L

BENDING MOMENT and DISPLACEMENT ANALYSIS of Fully Embedded Wall
Analysis options
2-D finite element model. Active limit arching modelled.
Soil deformations are elastic until the active or passive limit is reached
Open Tension Crack analysis - No

Length of wall perpendicular to section = 1000.00m

Rigid boundaries: Left side 40.00m from wall Rough
Right side 40.00m from wall Rough
Lower boundary at elevation 20.00m Rough
Soil-wall interface Smooth

*** Wall displacements reset to zero at stage 3

Node no.	Y coord	Nett pressure kN/m2	Wall disp. m	Wall rotation rad.	Shear force kN/m	Bending moment kN.m/m	Prop forces kN/m	EI of wall kN.m2/m
1	46.10	0.00	-0.013	-1.05E-03	0.0	-0.0		291880
2	45.50	0.00	-0.012	-1.05E-03	0.0	-0.0		291880
3	44.75	-0.00	-0.011	-1.05E-03	-0.0	-0.8		291880
4	44.00	-3.33	-0.010	-1.04E-03	-1.2	-1.5		291880
5	43.50	-6.16	-0.010	-1.04E-03	-3.6	-2.8		291880
6	43.00	-8.99	-0.009	-1.03E-03	-7.4	-5.6		291880
7	42.50	-13.51	-0.009	-1.01E-03	-13.0	-10.6		291880
		12.93	-0.009	-1.01E-03	-13.0	-10.6		
8	41.70	10.36	-0.008	-9.75E-04	-3.7	-16.9		291880
9	41.10	6.46	-0.007	-9.36E-04	1.3	-17.2		291880
10	40.55	3.67	-0.007	-9.01E-04	4.1	-15.5		291880
11	40.00	1.02	-0.006	-8.70E-04	5.4	-12.7		291880
12	39.20	-0.90	-0.006	-8.35E-04	5.5	-8.1		291880
13	39.00	-2.54	-0.006	-8.28E-04	5.1	-7.0		291880
14	38.60	-3.86	-0.005	-8.16E-04	3.8	-5.2		291880
15	38.00	-5.44	-0.005	-8.02E-04	1.0	-3.6		291880
16	37.53	-7.13	-0.004	-7.92E-04	-2.0	-3.7		291880
17	37.05	-8.69	-0.004	-7.82E-04	-5.7	-5.4		291880
18	36.58	-10.25	-0.004	-7.68E-04	-10.2	-9.1		291880
19	36.10	-12.06	-0.003	-7.47E-04	-15.5	-15.1		291880
20	35.40	-10.93	-0.003	-6.96E-04	-23.6	-28.9		291880
		16.45	-0.003	-6.96E-04	-23.6	-28.9		
21	35.10	13.19	-0.003	-6.65E-04	-19.1	-35.3		291880
22	34.70	9.07	-0.002	-6.16E-04	-14.7	-41.8		291880
		66.67	-0.002	-6.16E-04	-14.7	-41.8		
23	34.15	38.10	-0.002	-5.45E-04	14.2	-39.8		291880
24	33.60	14.00	-0.002	-4.87E-04	28.5	-26.3		291880
25	33.15	-10.94	-0.002	-4.60E-04	29.2	-12.0		291880
26	32.70	-97.14	-0.001	-4.52E-04	4.9	0.0		0
27	32.60	-0.00	-0.001	0	-0.0	0.0		0

(continued)

Stage No.4 Excavate to elevation 42.50 on LEFT side

Node no.	Y coord	Nett pressure	Wall disp.	Wall rotation	Shear force	Bending moment	Prop forces	EI of wall
		kN/m2	m	rad.	kN/m	kN.m/m	kN/m	kN.m2/m
28	32.40	-0.04	-0.001	0	-0.0	0.0		0
29	30.60	-0.00	-0.001	0	-0.0	0.0		0
30	28.80	-0.06	-0.001	0	-0.1	0.0		0
31	25.60	0.01	-0.001	0	-0.2	0.0		0
32	22.80	-0.01	-0.000	0	-0.2	0.0		0
33	20.00	0.13	-0.000	0	-0.0	0.0		---

LEFT side

Node no.	Y coord	Effective stresses: Water press.	Vertic -al	Active limit	Passive limit	Earth press.	Total earth press.	Adjusted soil modulus
		kN/m2	kN/m2	kN/m2	kN/m2	kN/m2	kN/m2	kN/m2
1	46.10	0.00	0.00	0.00	0.00	0.00	0.00	0.0
2	45.50	0.00	0.00	0.00	0.00	0.00	0.00	0.0
3	44.75	0.00	0.00	0.00	0.00	0.00	0.00	0.0
4	44.00	0.00	0.00	0.00	0.00	0.00	0.00	0.0
5	43.50	0.00	0.00	0.00	0.00	0.00	0.00	0.0
6	43.00	0.00	0.00	0.00	0.00	0.00	0.00	0.0
7	42.50	0.00	0.00	0.00	0.00	0.00	0.00	0.0
		0.00	0.00	0.00	26.45	26.45	26.45p	19999
8	41.70	0.00	14.40	0.00	81.34	33.20	33.20	19999
9	41.10	6.00	19.20	0.00	99.65	33.33	39.33	19999
10	40.55	11.50	23.60	0.85	116.43	33.99	45.49	19999
11	40.00	17.00	28.01	2.21	133.21	34.76	51.76	19999
12	39.20	25.00	34.41	4.20	157.64	37.03	62.03	19999
		25.00	34.41	3.62	176.02	34.38	59.38	19999
13	39.00	27.00	36.02	4.07	182.89	34.25	61.25	19999
14	38.60	31.00	39.22	4.99	196.64	35.10	66.10	19999
15	38.00	37.00	44.03	6.36	217.27	36.63	73.63	19999
16	37.53	41.75	47.84	7.45	233.61	37.61	79.36	19999
17	37.05	45.00	53.16	8.96	256.39	39.43	84.43	19999
18	36.58	45.00	61.72	11.40	293.12	42.88	87.88	19999
19	36.10	45.00	70.29	13.85	329.86	46.21	91.21	19999
20	35.40	45.00	82.92	17.45	384.02	52.91	97.91	19999
		45.00	82.92	7.97	557.17	59.87	104.87	49999
21	35.10	45.00	88.64	9.28	590.77	60.32	105.32	49999
22	34.70	45.00	96.26	11.02	635.59	61.33	106.33	49999
		45.00	96.26	0.00	1246.14	80.29	125.29	149996
23	34.15	45.00	107.30	0.00	1338.60	69.75	114.75	149996
24	33.60	45.00	118.34	0.00	1431.10	61.56	106.56	149996
25	33.15	45.00	127.37	0.00	1506.81	52.26	97.26	149996
26	32.70	45.00	136.41	0.00	1582.54	12.36	57.36	149996
27	32.60	45.00	138.42	0.00	1599.38	61.61	106.61	149996
28	32.40	45.00	142.44	0.00	1633.05	62.96	107.96	149996
29	30.60	45.00	178.64	0.00	1936.36	75.83	120.83	149996
30	28.80	45.00	214.91	0.00	2240.15	88.64	133.64	149996
31	25.60	49.00	275.52	1.41	2747.97	110.22	159.22	149996
32	22.80	77.00	304.21	6.64	2988.33	120.32	197.32	149996
33	20.00	105.00	333.03	11.88	3229.78	130.56	235.56	149996

(continued)

Stage No.4 Excavate to elevation 42.50 on LEFT side

RIGHT side

Node no.	Y coord	Water press.	Effective stresses: Vertic -al	Active limit	Passive limit	Earth press.	Total earth press.	Adjusted soil modulus
		kN/m2	kN/m2	kN/m2	kN/m2	kN/m2	kN/m2	kN/m2
1	46.10	0.00	0.00	0.00	0.00	0.00	0.00	0.0
2	45.50	0.00	0.00	0.00	0.00	0.00	0.00	0.0
		0.00	0.00	0.00	26.45	0.00	0.00a	19999
3	44.75	0.00	17.66	0.00	93.78	0.00	0.00a	19999
4	44.00	0.00	31.59	3.33	146.89	3.33	3.33a	19999
5	43.50	0.00	40.72	6.16	181.68	6.16	6.16a	19999
6	43.00	0.00	49.81	8.99	216.35	8.99	8.99a	19999
7	42.50	0.00	58.89	11.81	250.97	13.51	13.51	19999
8	41.70	0.00	73.42	16.32	306.33	22.84	22.84	19999
9	41.10	6.00	78.30	17.83	324.96	26.87	32.87	19999
10	40.55	11.50	82.78	19.22	342.03	30.32	41.82	19999
11	40.00	17.00	87.25	20.61	359.07	33.74	50.74	19999
12	39.20	25.00	93.74	22.63	383.79	37.94	62.94	19999
		25.00	93.74	20.53	430.38	35.29	60.29	19999
13	39.00	27.00	95.35	20.99	437.32	36.79	63.79	19999
14	38.60	31.00	98.59	21.91	451.18	38.97	69.97	19999
15	38.00	37.00	103.42	23.29	471.91	42.07	79.07	19999
16	37.53	41.75	107.24	24.38	488.29	44.74	86.49	19999
17	37.05	45.00	112.55	25.89	511.05	48.12	93.12	19999
18	36.58	45.00	121.10	28.33	547.72	53.13	98.13	19999
19	36.10	45.00	129.64	30.76	584.34	58.27	103.27	19999
20	35.40	45.00	142.22	34.35	638.26	63.84	108.84	19999
		45.00	142.22	21.54	905.76	43.42	88.42	49997
21	35.10	45.00	147.90	22.85	939.18	47.13	92.13	49997
22	34.70	45.00	155.48	24.58	983.71	52.26	97.26	49997
		45.00	155.48	0.00	1742.26	13.62	58.62	149992
23	34.15	45.00	166.44	0.00	1834.07	31.65	76.65	149992
24	33.60	45.00	177.39	0.00	1925.81	47.57	92.57	149992
25	33.15	45.00	186.34	0.00	2000.83	63.20	108.20	149992
26	32.70	45.00	195.29	0.00	2075.81	109.49	154.49	149992
27	32.60	45.00	197.28	0.00	2092.47	61.61	106.61	149992
28	32.40	45.00	201.25	0.00	2125.78	63.00	108.00	149992
29	30.60	45.00	237.01	0.00	2425.38	75.83	120.83	149992
30	28.80	45.00	272.74	0.91	2724.73	88.69	133.69	149992
31	25.60	49.00	332.24	11.74	3223.21	110.21	159.21	149992
32	22.80	77.00	359.81	16.76	3454.22	120.33	197.33	149992
33	20.00	105.00	387.42	21.78	3685.50	130.43	235.43	149992

Legend: 8.99 a Soil pressure at active limit
26.45 p Soil pressure at passive limit

Units: kN,m

Stage No.4 Excav. to elev. 42.50 on LEFT side

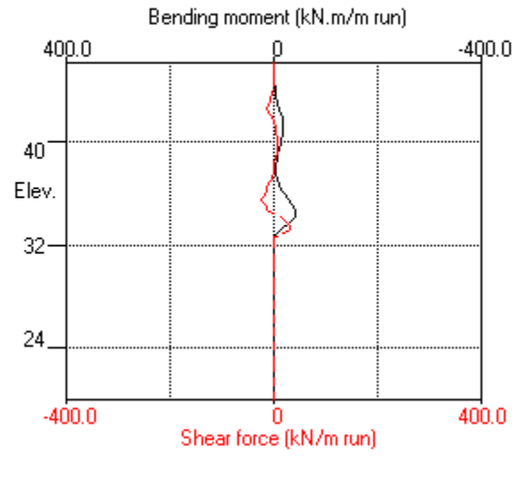

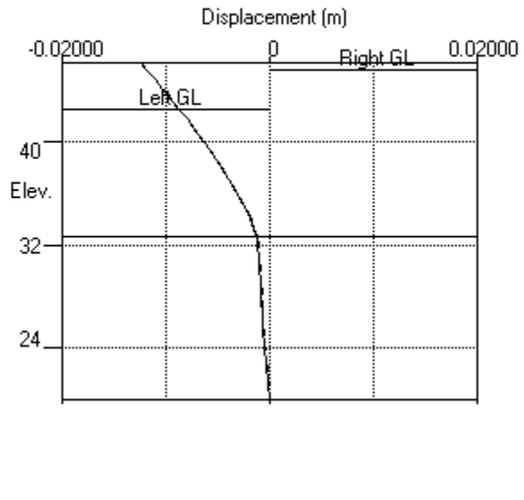

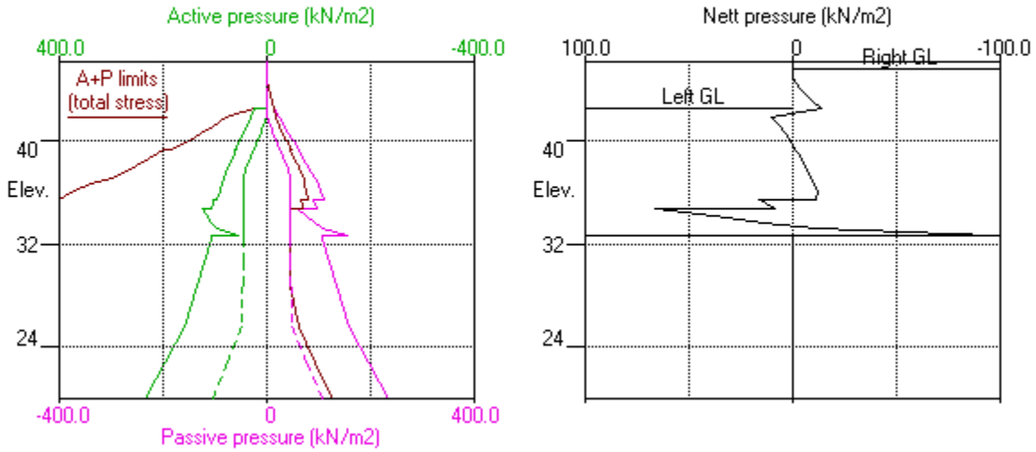

Units: kN,m

Stage No.5 Install prop no.1 at elev. 43.00

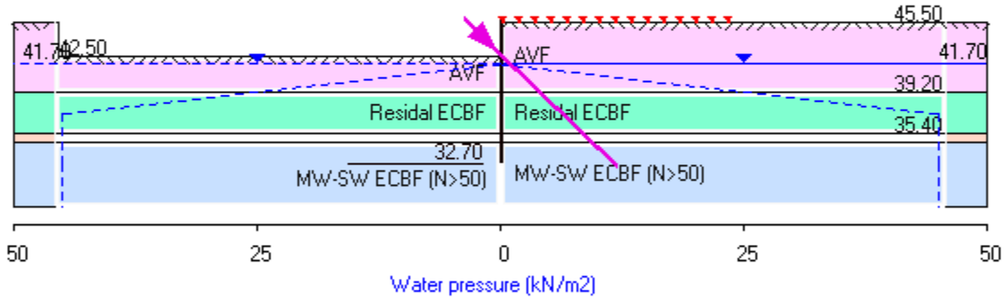

TONKIN + TAYLOR LTD | Sheet No.
Program: WALLAP Version 6.09 Revision A61.B78.R61 | Job No.
Licensed from GEOSOLVE | Made by :
Data filename/Run ID: 20261027_UoA_Section2_Anc_DeflectionEnvelope
New data set - contains default parameters | Date:28-10-2026
Please modify / add | Checked :

Units: kN,m

Stage No. 5 Install strut or anchor no.1 at elevation 43.00

STABILITY ANALYSIS of Fully Embedded Wall according to Strength Factor method
Factor of safety on soil strength

Stage No.	Ground level Act.	Ground level Pass.	Prop Elev.	Factor of Safety	Moment equilib. at elev.	Toe elev.	Wall Penetr -ation	Direction of failure
			FoS for toe elev. = 32.70			**Toe elev. for FoS = 1.500**		
5	45.50	42.50	43.00	Conditions not suitable for FoS calc.				

BENDING MOMENT and DISPLACEMENT ANALYSIS of Fully Embedded Wall
Analysis options
2-D finite element model. Active limit arching modelled.
Soil deformations are elastic until the active or passive limit is reached
Open Tension Crack analysis - No

Length of wall perpendicular to section = 1000.00m

Rigid boundaries: Left side 40.00m from wall Rough
Right side 40.00m from wall Rough
Lower boundary at elevation 20.00m Rough
Soil-wall interface Smooth

*** Wall displacements reset to zero at stage 3

Node no.	Y coord	Nett pressure kN/m2	Wall disp. m	Wall rotation rad.	Shear force kN/m	Bending moment kN.m/m	Prop forces kN/m	EI of wall kN.m2/m
1	46.10	0.00	-0.002	-1.17E-04	0.0	-0.0		291880
2	45.50	0.00	-0.002	-1.17E-04	0.0	0.0		291880
		-21.68	-0.002	-1.17E-04	0.0	-0.0		
3	44.75	-20.91	-0.002	-1.08E-04	-16.0	-6.9		291880
4	44.00	-23.02	-0.002	-6.63E-05	-32.4	-25.5		291880
5	43.50	-24.66	-0.002	-5.17E-06	-44.4	-44.8		291880
6	43.00	-26.08	-0.002	9.48E-05	-57.1	-70.3	125.2	291880
		-26.08	-0.002	9.48E-05	68.2	-70.3		
7	42.50	-27.99	-0.002	1.90E-04	54.6	-39.6		291880
		-23.36	-0.002	1.90E-04	54.6	-39.6		
8	41.70	-18.71	-0.002	2.53E-04	37.8	-3.4		291880
9	41.10	-15.27	-0.003	2.44E-04	27.6	15.9		291880
10	40.55	-12.73	-0.003	2.06E-04	19.9	28.8		291880
11	40.00	-10.59	-0.003	1.48E-04	13.5	37.8		291880
12	39.20	-9.33	-0.003	4.15E-05	5.5	45.2		291880
13	39.00	-8.53	-0.003	1.20E-05	3.8	46.2		291880
14	38.60	-8.28	-0.003	-4.82E-05	0.4	47.0		291880
15	38.00	-8.25	-0.003	-1.38E-04	-4.6	45.7		291880
16	37.53	-8.61	-0.003	-2.06E-04	-8.6	42.6		291880
17	37.05	-9.23	-0.003	-2.68E-04	-12.8	37.6		291880
18	36.58	-10.03	-0.002	-3.22E-04	-17.4	30.5		291880
19	36.10	-10.97	-0.002	-3.63E-04	-22.4	21.1		291880
20	35.40	-11.55	-0.002	-3.93E-04	-30.3	2.7		291880
		14.90	-0.002	-3.93E-04	-30.3	2.7		
21	35.10	9.39	-0.002	-3.93E-04	-26.6	-5.7		291880
22	34.70	5.04	-0.002	-3.82E-04	-23.7	-15.6		291880
		54.61	-0.002	-3.82E-04	-23.7	-15.6		
23	34.15	33.35	-0.002	-3.54E-04	0.5	-20.4		291880
24	33.60	15.41	-0.001	-3.26E-04	13.9	-15.1		291880
25	33.15	-2.72	-0.001	-3.11E-04	16.7	-7.3		291880

(continued)

Stage No.5 Install strut or anchor no.1 at elevation 43.00

Node no.	Y coord	Nett pressure kN/m2	Wall disp. m	Wall rotation rad.	Shear force kN/m	Bending moment kN.m/m	Prop forces kN/m	EI of wall kN.m2/m
26	32.70	-58.62	-0.001	-3.06E-04	2.9	0.0		0
27	32.60	-0.00	-0.001	0	-0.0	0.0		0
28	32.40	-0.04	-0.001	0	-0.0	0.0		0
29	30.60	-0.00	-0.001	0	-0.0	0.0		0
30	28.80	-0.06	-0.001	0	-0.1	0.0		0
31	25.60	0.01	-0.001	0	-0.2	0.0		0
32	22.80	-0.01	-0.000	0	-0.2	0.0		0
33	20.00	0.13	-0.000	0	-0.0	0.0		---

At elev. 43.00 Prop force = 125.2 kN/m run (horiz.)
= 177.1 kN/m run (inclined)

LEFT side

Node no.	Y coord	Water press. kN/m2	Effective stresses Vertic -al kN/m2	Active limit kN/m2	Passive limit kN/m2	Earth press. kN/m2	Total earth press. kN/m2	Adjusted soil modulus kN/m2
1	46.10	0.00	0.00	0.00	0.00	0.00	0.00	0.0
2	45.50	0.00	0.00	0.00	0.00	0.00	0.00	0.0
3	44.75	0.00	0.00	0.00	0.00	0.00	0.00	0.0
4	44.00	0.00	0.00	0.00	0.00	0.00	0.00	0.0
5	43.50	0.00	0.00	0.00	0.00	0.00	0.00	0.0
6	43.00	0.00	0.00	0.00	0.00	0.00	0.00	0.0
7	42.50	0.00	0.00	0.00	0.00	0.00	0.00	0.0
		0.00	0.00	0.00	26.45	4.63	4.63	19999
8	41.70	0.00	14.40	0.00	81.34	15.52	15.52	19999
9	41.10	6.00	19.20	0.00	99.65	20.08	26.08	19999
10	40.55	11.50	23.60	0.85	116.43	23.87	35.37	19999
11	40.00	17.00	28.01	2.21	133.21	27.42	44.42	19999
12	39.20	25.00	34.41	4.20	157.64	31.54	56.54	19999
		25.00	34.41	3.62	176.02	28.89	53.89	19999
13	39.00	27.00	36.02	4.07	182.89	30.14	57.14	19999
14	38.60	31.00	39.22	4.99	196.64	31.91	62.91	19999
15	38.00	37.00	44.03	6.36	217.27	34.36	71.36	19999
16	37.53	41.75	47.84	7.45	233.61	36.11	77.86	19999
17	37.05	45.00	53.16	8.96	256.39	38.46	83.46	19999
18	36.58	45.00	61.72	11.40	293.12	42.34	87.34	19999
19	36.10	45.00	70.29	13.85	329.86	46.15	91.15	19999
20	35.40	45.00	82.92	17.45	384.02	52.18	97.18	19999
		45.00	82.92	7.97	557.17	58.05	103.05	49999
21	35.10	45.00	88.64	9.28	590.77	57.83	102.83	49999
22	34.70	45.00	96.26	11.02	635.59	58.96	103.96	49999
		45.00	96.26	0.00	1246.14	73.18	118.18	149996
23	34.15	45.00	107.30	0.00	1338.60	66.56	111.56	149996
24	33.60	45.00	118.34	0.00	1431.10	61.56	106.56	149996
25	33.15	45.00	127.37	0.00	1506.81	55.75	100.75	149996
26	32.70	45.00	136.41	0.00	1582.54	31.04	76.04	149996
27	32.60	45.00	138.42	0.00	1599.38	61.31	106.31	149996
28	32.40	45.00	142.44	0.00	1633.05	62.71	107.71	149996
29	30.60	45.00	178.64	0.00	1936.36	75.64	120.64	149996
30	28.80	45.00	214.91	0.00	2240.15	88.52	133.52	149996
31	25.60	49.00	275.52	1.41	2747.97	110.13	159.13	149996
32	22.80	77.00	304.21	6.64	2988.33	120.24	197.24	149996
33	20.00	105.00	333.03	11.88	3229.78	130.46	235.46	149996

(continued)

Stage No.5 Install strut or anchor no.1 at elevation 43.00

		RIGHT side						
			Effective stresses				Total	Adjusted
Node no.	Y coord	Water press.	Vertic -al	Active limit	Passive limit	Earth press.	earth press.	soil modulus
		kN/m2	kN/m2	kN/m2	kN/m2	kN/m2	kN/m2	kN/m2
1	46.10	0.00	0.00	0.00	0.00	0.00	0.00	0.0
2	45.50	0.00	0.00	0.00	0.00	0.00	0.00	0.0
		0.00	0.00	0.00	26.45	21.68	21.68	19999
3	44.75	0.00	17.66	0.00	93.78	20.91	20.91	19999
4	44.00	0.00	31.59	3.33	146.89	23.02	23.02	19999
5	43.50	0.00	40.72	6.16	181.68	24.66	24.66	19999
6	43.00	0.00	49.81	8.99	216.35	26.08	26.08	19999
7	42.50	0.00	58.89	11.81	250.97	27.99	27.99	19999
8	41.70	0.00	73.42	16.32	306.33	34.23	34.23	19999
9	41.10	6.00	78.30	17.83	324.96	35.35	41.35	19999
10	40.55	11.50	82.78	19.22	342.03	36.61	48.11	19999
11	40.00	17.00	87.25	20.61	359.07	38.01	55.01	19999
12	39.20	25.00	93.74	22.63	383.79	40.87	65.87	19999
		25.00	93.74	20.53	430.38	38.22	63.22	19999
13	39.00	27.00	95.35	20.99	437.32	38.67	65.67	19999
14	38.60	31.00	98.59	21.91	451.18	40.19	71.19	19999
15	38.00	37.00	103.42	23.29	471.91	42.61	79.61	19999
16	37.53	41.75	107.24	24.38	488.29	44.72	86.47	19999
17	37.05	45.00	112.55	25.89	511.05	47.69	92.69	19999
18	36.58	45.00	121.10	28.33	547.72	52.37	97.37	19999
19	36.10	45.00	129.64	30.76	584.34	57.12	102.12	19999
20	35.40	45.00	142.22	34.35	638.26	63.73	108.73	19999
		45.00	142.22	21.54	905.76	43.15	88.15	49997
21	35.10	45.00	147.90	22.85	939.18	48.44	93.44	49997
22	34.70	45.00	155.48	24.58	983.71	53.92	98.92	49997
		45.00	155.48	0.00	1742.26	18.57	63.57	149992
23	34.15	45.00	166.44	0.00	1834.07	33.21	78.21	149992
24	33.60	45.00	177.39	0.00	1925.81	46.15	91.15	149992
25	33.15	45.00	186.34	0.00	2000.83	58.47	103.47	149992
26	32.70	45.00	195.29	0.00	2075.81	89.67	134.67	149992
27	32.60	45.00	197.28	0.00	2092.47	61.32	106.32	149992
28	32.40	45.00	201.25	0.00	2125.78	62.75	107.75	149992
29	30.60	45.00	237.01	0.00	2425.38	75.64	120.64	149992
30	28.80	45.00	272.74	0.91	2724.73	88.57	133.57	149992
31	25.60	49.00	332.24	11.74	3223.21	110.13	159.13	149992
32	22.80	77.00	359.81	16.76	3454.22	120.24	197.24	149992
33	20.00	105.00	387.42	21.78	3685.50	130.33	235.33	149992

Units: kN,m

Stage No.5 Install prop no.1 at elev. 43.00

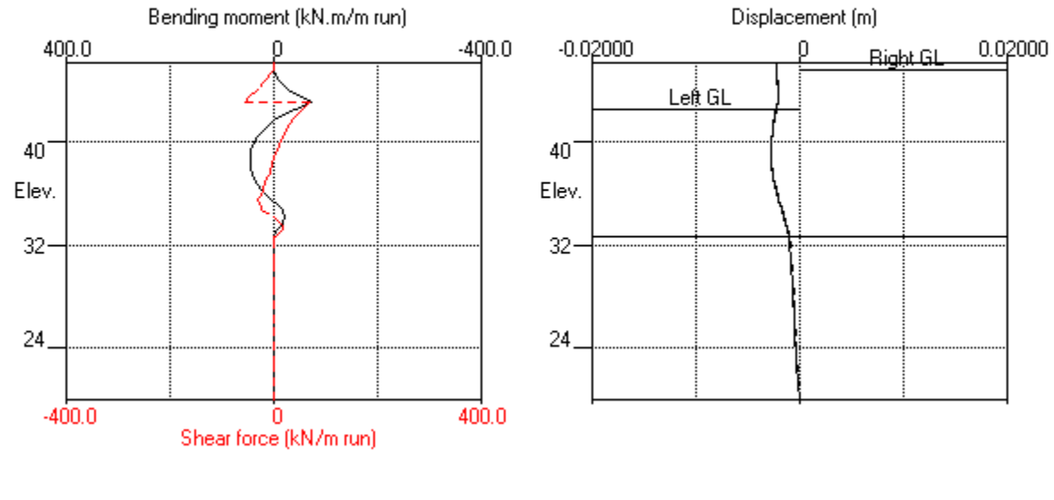

Stage No.5 Install prop no.1 at elev. 43.00

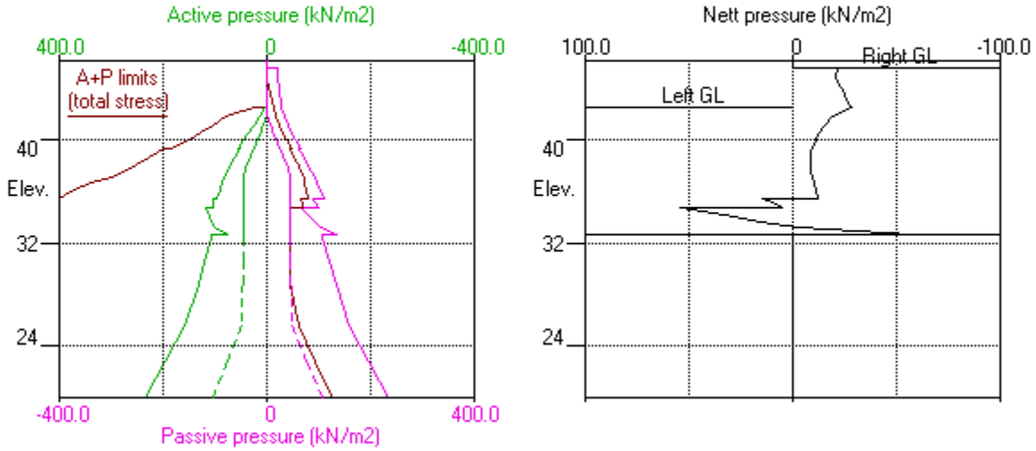

Units: kN,m

Stage No.6 Excav. to elev. 38.00 on LEFT side

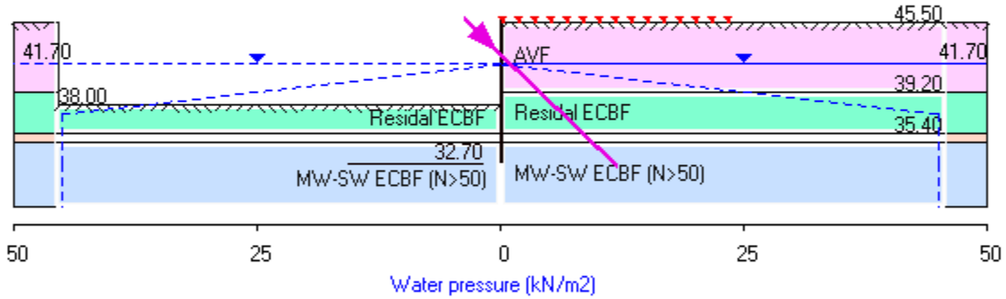

TONKIN + TAYLOR LTD | Sheet No.
Program: WALLAP Version 6.09 Revision A61.B78.R61 | Job No.
Licensed from GEOSOLVE | Made by :
Data filename/Run ID: 20261027_UoA_Section2_Anc_DeflectionEnvelope
New data set - contains default parameters | Date:28-10-2026
Please modify / add | Checked :

Units: kN,m

Stage No. 6 Excavate to elevation 38.00 on LEFT side

STABILITY ANALYSIS of Fully Embedded Wall according to Strength Factor method
Factor of safety on soil strength

Stage No.	Ground level Act.	Ground level Pass.	Prop Elev.	FoS for toe elev. = 32.70 Factor of Safety	Moment equilib. at elev.	Toe elev. for FoS = 1.500 Toe elev.	Wall Penetr -ation	Direction of failure
6	45.50	38.00	43.00	3.762	n/a	35.24	2.76	R to L

BENDING MOMENT and DISPLACEMENT ANALYSIS of Fully Embedded Wall
Analysis options
2-D finite element model. Active limit arching modelled.
Soil deformations are elastic until the active or passive limit is reached
Open Tension Crack analysis - No

Length of wall perpendicular to section = 1000.00m
Rigid boundaries: Left side 40.00m from wall Rough
Right side 40.00m from wall Rough
Lower boundary at elevation 20.00m Rough
Soil-wall interface Smooth

*** Wall displacements reset to zero at stage 3

Node no.	Y coord	Nett pressure kN/m2	Wall disp. m	Wall rotation rad.	Shear force kN/m	Bending moment kN.m/m	Prop forces kN/m	EI of wall kN.m2/m
1	46.10	0.00	-0.006	1.89E-04	0.0	0.0		291880
2	45.50	0.00	-0.006	1.89E-04	0.0	0.0		291880
		-21.43	-0.006	1.89E-04	0.0	-0.0		
3	44.75	-18.65	-0.006	1.98E-04	-15.0	-6.9		291880
4	44.00	-18.74	-0.006	2.38E-04	-29.0	-24.1		291880
5	43.50	-18.84	-0.006	2.95E-04	-38.4	-41.1		291880
6	43.00	-18.99	-0.007	3.86E-04	-47.9	-62.9	136.8	291880
		-18.99	-0.007	3.86E-04	88.9	-62.9		
7	42.50	-19.37	-0.007	4.59E-04	79.3	-21.0		291880
8	41.70	-24.07	-0.007	4.44E-04	62.0	35.1		291880
9	41.10	-23.87	-0.007	3.42E-04	47.6	67.7		291880
10	40.55	-24.30	-0.008	1.98E-04	34.3	90.0		291880
11	40.00	-25.24	-0.008	1.89E-05	20.7	105.1		291880
12	39.20	-28.04	-0.008	-2.73E-04	-0.6	113.1		291880
		-25.38	-0.008	-2.73E-04	-0.6	113.1		
13	39.00	-26.07	-0.008	-3.48E-04	-5.7	112.5		291880
14	38.60	-28.05	-0.007	-4.96E-04	-16.6	108.1		291880
15	38.00	-31.25	-0.007	-6.97E-04	-34.4	92.9		291880
		-2.77	-0.007	-6.97E-04	-34.4	92.9		
16	37.53	-3.53	-0.007	-8.31E-04	-35.9	76.3		291880
17	37.05	-6.44	-0.006	-9.38E-04	-38.2	58.9		291880
18	36.58	-9.57	-0.006	-1.01E-03	-42.0	40.0		291880
19	36.10	-12.85	-0.005	-1.06E-03	-47.3	18.9		291880
20	35.40	-14.17	-0.004	-1.06E-03	-56.8	-17.4		291880
		40.90	-0.004	-1.06E-03	-56.8	-17.4		
21	35.10	28.30	-0.004	-1.04E-03	-46.4	-32.6		291880
22	34.70	18.12	-0.004	-9.91E-04	-37.1	-48.9		291880
		101.93	-0.004	-9.91E-04	-37.1	-48.9		
23	34.15	71.92	-0.003	-9.00E-04	10.7	-53.9		291880
24	33.60	28.83	-0.003	-8.19E-04	38.4	-37.1		291880

Run ID. 20261027_UoA_Section2_Anc_DeflectionEnvelope | Sheet No.
New data set - contains default parameters | Date:28-10-2026
Please modify / add | Checked :

(continued)

Stage No.6 Excavate to elevation 38.00 on LEFT side

Node no.	Y coord	Nett pressure	Wall disp.	Wall rotation	Shear force	Bending moment	Prop forces	EI of wall
		kN/m2	m	rad.	kN/m	kN.m/m	kN/m	kN.m2/m
25	33.15	-16.09	-0.002	-7.80E-04	41.2	-16.9		291880
26	32.70	-136.80	-0.002	-7.68E-04	6.8	0.0		0
27	32.60	-0.00	-0.002	0	-0.0	0.0		0
28	32.40	-0.04	-0.002	0	-0.0	0.0		0
29	30.60	-0.01	-0.002	0	-0.0	0.0		0
30	28.80	-0.06	-0.002	0	-0.1	0.0		0
31	25.60	0.00	-0.001	0	-0.2	0.0		0
32	22.80	-0.01	-0.001	0	-0.2	0.0		0
33	20.00	0.17	-0.000	0	-0.0	0.0		---

At elev. 43.00 Prop force = 136.8 kN/m run (horiz.)
= 193.5 kN/m run (inclined)

LEFT side

Node no.	Y coord	Effective stresses: Water press.	Vertic -al	Active limit	Passive limit	Earth press.	Total earth press.	Adjusted soil modulus
		kN/m2	kN/m2	kN/m2	kN/m2	kN/m2	kN/m2	kN/m2
1	46.10	0.00	0.00	0.00	0.00	0.00	0.00	0.0
2	45.50	0.00	0.00	0.00	0.00	0.00	0.00	0.0
3	44.75	0.00	0.00	0.00	0.00	0.00	0.00	0.0
4	44.00	0.00	0.00	0.00	0.00	0.00	0.00	0.0
5	43.50	0.00	0.00	0.00	0.00	0.00	0.00	0.0
6	43.00	0.00	0.00	0.00	0.00	0.00	0.00	0.0
7	42.50	0.00	0.00	0.00	0.00	0.00	0.00	0.0
8	41.70	0.00	0.00	0.00	0.00	0.00	0.00	0.0
9	41.10	6.00	0.00	0.00	0.00	0.00	6.00	0.0
10	40.55	11.50	0.00	0.00	0.00	0.00	11.50	0.0
11	40.00	17.00	0.00	0.00	0.00	0.00	17.00	0.0
12	39.20	25.00	0.00	0.00	0.00	0.00	25.00	0.0
13	39.00	27.00	0.00	0.00	0.00	0.00	27.00	0.0
14	38.60	31.00	0.00	0.00	0.00	0.00	31.00	0.0
15	38.00	37.00	0.00	0.00	0.00	0.00	37.00	0.0
		37.00	0.00	0.00	28.47	28.47	65.47p	20000
16	37.53	41.75	3.80	0.00	44.77	30.80	72.55	20000
17	37.05	45.00	9.10	0.00	67.49	31.80	76.80	20000
18	36.58	45.00	17.65	0.00	104.16	34.24	79.24	20000
19	36.10	45.00	26.20	1.28	140.83	36.55	81.55	20000
20	35.40	45.00	38.81	4.87	194.88	41.85	86.85	20000
		45.00	38.81	0.00	297.84	64.78	109.78	49999
21	35.10	45.00	44.52	0.00	331.38	60.76	105.76	49999
22	34.70	45.00	52.12	0.92	376.10	58.74	103.74	49999
		45.00	52.12	0.00	876.34	101.93	146.93	149997
23	34.15	45.00	63.14	0.00	968.61	80.06	125.06	149997
24	33.60	45.00	74.15	0.00	1060.92	62.30	107.30	149997
25	33.15	45.00	83.17	0.00	1136.48	42.94	87.94	149997
26	32.70	45.00	92.19	0.00	1212.06	0.00	45.00a	149997
27	32.60	45.00	94.20	0.00	1228.87	55.02	100.02	149997
28	32.40	45.00	98.21	0.00	1262.47	56.29	101.29	149997
29	30.60	45.00	134.35	0.00	1565.27	68.97	113.97	149997
30	28.80	45.00	170.58	0.00	1868.75	81.59	126.59	149997
31	25.60	49.00	231.21	0.00	2376.75	103.04	152.04	149997
32	22.80	77.00	260.04	0.00	2618.30	113.09	190.09	149997
33	20.00	105.00	289.13	3.89	2862.05	123.36	228.36	149997

(continued)

Stage No.6 Excavate to elevation 38.00 on LEFT side

		RIGHT side						
			Effective stresses				Total	Adjusted
Node no.	Y coord	Water press.	Vertic -al	Active limit	Passive limit	Earth press.	earth press.	soil modulus
		kN/m2	kN/m2	kN/m2	kN/m2	kN/m2	kN/m2	kN/m2
1	46.10	0.00	0.00	0.00	0.00	0.00	0.00	0.0
2	45.50	0.00	0.00	0.00	0.00	0.00	0.00	0.0
		0.00	0.00	0.00	26.45	21.43	21.43	19999
3	44.75	0.00	17.66	0.00	93.78	18.65	18.65	19999
4	44.00	0.00	31.59	3.33	146.89	18.74	18.74	19999
5	43.50	0.00	40.72	6.16	181.68	18.84	18.84	19999
6	43.00	0.00	49.81	8.99	216.35	18.99	18.99	19999
7	42.50	0.00	58.89	11.81	250.97	19.37	19.37	19999
8	41.70	0.00	73.42	16.32	306.33	24.07	24.07	19999
9	41.10	6.00	78.30	17.83	324.96	23.87	29.87	19999
10	40.55	11.50	82.78	19.22	342.03	24.30	35.80	19999
11	40.00	17.00	87.25	20.61	359.07	25.24	42.24	19999
12	39.20	25.00	93.74	22.63	383.79	28.04	53.04	19999
		25.00	93.74	20.53	430.38	25.38	50.38	19999
13	39.00	27.00	95.35	20.99	437.32	26.07	53.07	19999
14	38.60	31.00	98.59	21.91	451.18	28.05	59.05	19999
15	38.00	37.00	103.42	23.29	471.91	31.25	68.25	19999
16	37.53	41.75	107.24	24.38	488.29	34.33	76.08	19999
17	37.05	45.00	112.55	25.89	511.05	38.25	83.25	19999
18	36.58	45.00	121.10	28.33	547.72	43.81	88.81	19999
19	36.10	45.00	129.64	30.76	584.34	49.40	94.40	19999
20	35.40	45.00	142.22	34.35	638.26	56.02	101.02	19999
		45.00	142.22	21.54	905.76	23.88	68.88	49997
21	35.10	45.00	147.90	22.85	939.18	32.46	77.46	49997
22	34.70	45.00	155.48	24.58	983.71	40.62	85.62	49997
		45.00	155.48	0.00	1742.26	0.00	45.00a	149992
23	34.15	45.00	166.44	0.00	1834.07	8.14	53.14	149992
24	33.60	45.00	177.39	0.00	1925.81	33.47	78.47	149992
25	33.15	45.00	186.34	0.00	2000.83	59.03	104.03	149992
26	32.70	45.00	195.29	0.00	2075.81	136.80	181.80	149992
27	32.60	45.00	197.28	0.00	2092.47	55.03	100.03	149992
28	32.40	45.00	201.25	0.00	2125.78	56.33	101.33	149992
29	30.60	45.00	237.01	0.00	2425.38	68.98	113.98	149992
30	28.80	45.00	272.74	0.91	2724.73	81.65	126.65	149992
31	25.60	49.00	332.24	11.74	3223.21	103.04	152.04	149992
32	22.80	77.00	359.81	16.76	3454.22	113.10	190.10	149992
33	20.00	105.00	387.42	21.78	3685.50	123.19	228.19	149992

Legend: 45.00 a Soil pressure at active limit
65.47 p Soil pressure at passive limit

Units: kN,m

Stage No.6 Excav. to elev. 38.00 on LEFT side

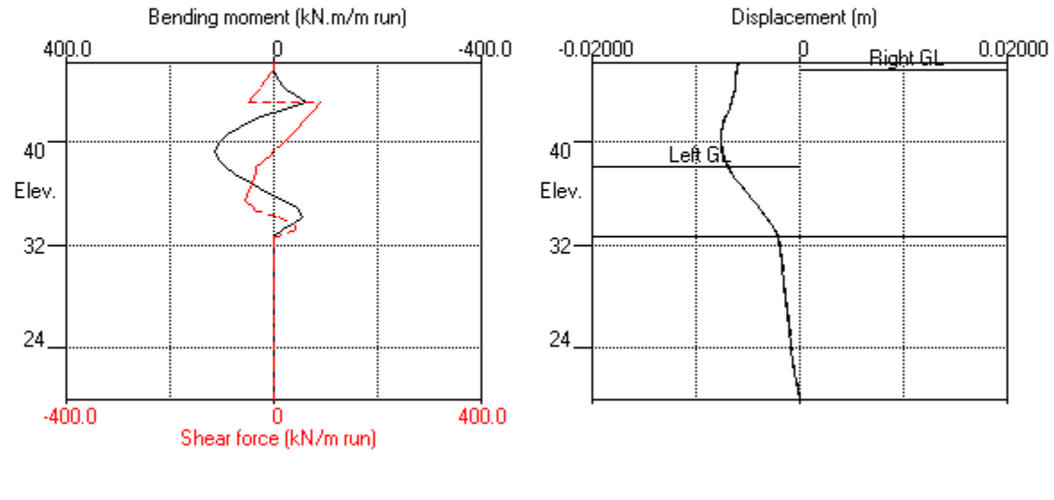

Stage No.6 Excav. to elev. 38.00 on LEFT side

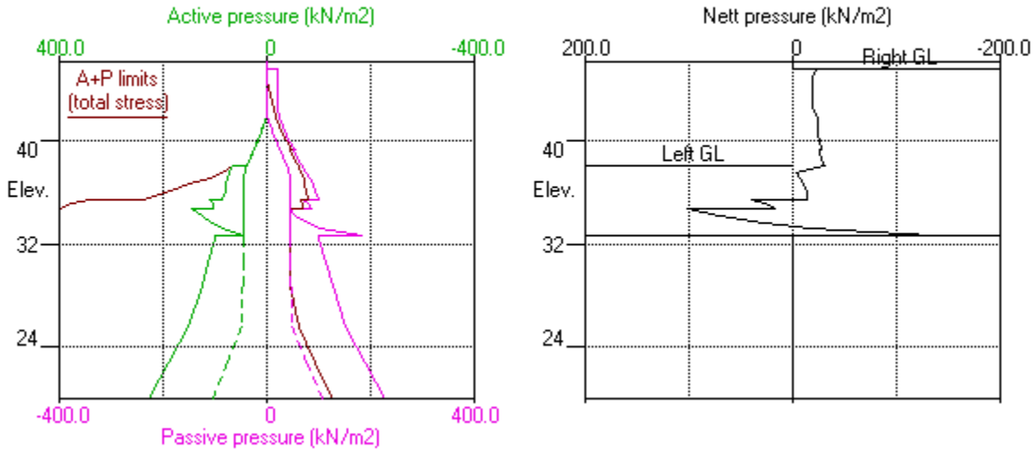

Units: kN,m

Stage No.8 Install prop no.2 at elev. 39.00

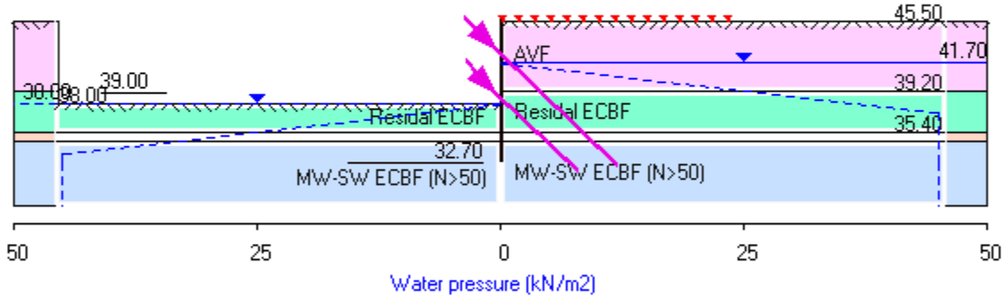

TONKIN + TAYLOR LTD | Sheet No.
Program: WALLAP Version 6.09 Revision A61.B78.R61 | Job No.
Licensed from GEOSOLVE | Made by :
Data filename/Run ID: 20261027_UoA_Section2_Anc_DeflectionEnvelope
New data set - contains default parameters | Date:28-10-2026
Please modify / add | Checked :

Units: kN,m

Stage No. 8 Install strut or anchor no.2 at elevation 39.00

STABILITY ANALYSIS of Fully Embedded Wall according to Strength Factor method
Factor of safety on soil strength

Stage No.	Ground level Act.	Ground level Pass.	Prop Elev.	FoS for toe elev. = 32.70 Factor of Safety	Moment equilib. at elev.	Toe elev. for FoS = 1.500 Toe elev.	Wall Penetr -ation	Direction of failure
8	38.00	45.50		More than one prop. No FoS calc.				

BENDING MOMENT and DISPLACEMENT ANALYSIS of Fully Embedded Wall
Analysis options
2-D finite element model. Active limit arching modelled.
Soil deformations are elastic until the active or passive limit is reached
Open Tension Crack analysis - No

Length of wall perpendicular to section = 1000.00m

Rigid boundaries: Left side 40.00m from wall Rough
Right side 40.00m from wall Rough
Lower boundary at elevation 20.00m Rough
Soil-wall interface Smooth

*** Wall displacements reset to zero at stage 3

Node no.	Y coord	Nett pressure kN/m2	Wall disp. m	Wall rotation rad.	Shear force kN/m	Bending moment kN.m/m	Prop forces kN/m	EI of wall kN.m2/m
1	46.10	0.00	-0.007	3.52E-04	0.0	-0.0		291880
2	45.50	0.00	-0.007	3.52E-04	0.0	0.0		291880
		-22.40	-0.007	3.52E-04	0.0	-0.0		
3	44.75	-18.92	-0.008	3.61E-04	-15.5	-7.1		291880
4	44.00	-18.27	-0.008	4.03E-04	-29.4	-24.8		291880
5	43.50	-17.79	-0.008	4.61E-04	-38.5	-42.0		291880
6	43.00	-17.46	-0.008	5.53E-04	-47.3	-63.6	141.1	291880
		-17.46	-0.008	5.53E-04	93.8	-63.6		
7	42.50	-18.37	-0.009	6.25E-04	84.8	-19.1		291880
8	41.70	-24.46	-0.009	5.99E-04	67.7	41.7		291880
9	41.10	-33.56	-0.009	4.80E-04	50.3	77.3		291880
10	40.55	-41.73	-0.010	3.18E-04	29.6	99.4		291880
11	40.00	-49.77	-0.010	1.26E-04	4.4	108.9		291880
12	39.20	-60.45	-0.010	-1.46E-04	-39.7	95.2		291880
		-58.36	-0.010	-1.46E-04	-39.7	95.2		
13	39.00	-60.82	-0.010	-2.06E-04	-51.6	86.1	125.2	291880
		-60.82	-0.010	-2.06E-04	73.6	86.1		
14	38.60	-64.90	-0.010	-3.38E-04	48.5	110.6		291880
15	38.00	-70.89	-0.009	-5.77E-04	7.8	127.5		291880
		-56.59	-0.009	-5.77E-04	7.8	127.5		
16	37.53	-38.49	-0.009	-7.79E-04	-14.8	124.8		291880
17	37.05	-28.55	-0.009	-9.70E-04	-30.7	113.4		291880
18	36.58	-27.99	-0.008	-1.13E-03	-44.2	95.7		291880
19	36.10	-28.19	-0.008	-1.27E-03	-57.5	71.7		291880
20	35.40	-26.17	-0.007	-1.39E-03	-76.5	24.8		291880
		22.67	-0.007	-1.39E-03	-76.5	24.8		
21	35.10	20.88	-0.006	-1.40E-03	-70.0	2.9		291880
22	34.70	20.16	-0.006	-1.39E-03	-61.8	-23.3		291880
		100.59	-0.006	-1.39E-03	-61.8	-23.3		
23	34.15	84.87	-0.005	-1.34E-03	-10.8	-41.9		291880

(continued)

Stage No.8 Install strut or anchor no.2 at elevation 39.00

Node no.	Y coord	Nett pressure	Wall disp.	Wall rotation	Shear force	Bending moment	Prop forces	EI of wall
		kN/m2	m	rad.	kN/m	kN.m/m	kN/m	kN.m2/m
24	33.60	57.85	-0.004	-1.27E-03	28.4	-34.8		291880
25	33.15	-14.39	-0.004	-1.23E-03	38.2	-16.2		291880
26	32.70	-126.49	-0.003	-1.22E-03	6.5	-0.0		0
27	32.60	-1.37	-0.003	0	0.1	0.0		0
28	32.40	-0.04	-0.003	0	-0.0	0.0		0
29	30.60	-0.01	-0.003	0	-0.1	0.0		0
30	28.80	-0.07	-0.002	0	-0.1	0.0		0
31	25.60	0.00	-0.002	0	-0.2	0.0		0
32	22.80	-0.02	-0.001	0	-0.3	0.0		0
33	20.00	0.21	-0.000	0	-0.0	0.0		---

At elev. 43.00 Prop force = 141.1 kN/m run (horiz.)
= 199.5 kN/m run (inclined)

At elev. 39.00 Prop force = 125.2 kN/m run (horiz.)
= 177.1 kN/m run (inclined)

		LEFT side						
			Effective stresses				Total earth	Adjusted soil
Node no.	Y coord	Water press.	Vertic -al	Active limit	Passive limit	Earth press.	press.	modulus
		kN/m2	kN/m2	kN/m2	kN/m2	kN/m2	kN/m2	kN/m2
1	46.10	0.00	0.00	0.00	0.00	0.00	0.00	0.0
2	45.50	0.00	0.00	0.00	0.00	0.00	0.00	0.0
3	44.75	0.00	0.00	0.00	0.00	0.00	0.00	0.0
4	44.00	0.00	0.00	0.00	0.00	0.00	0.00	0.0
5	43.50	0.00	0.00	0.00	0.00	0.00	0.00	0.0
6	43.00	0.00	0.00	0.00	0.00	0.00	0.00	0.0
7	42.50	0.00	0.00	0.00	0.00	0.00	0.00	0.0
8	41.70	0.00	0.00	0.00	0.00	0.00	0.00	0.0
9	41.10	0.00	0.00	0.00	0.00	0.00	0.00	0.0
10	40.55	0.00	0.00	0.00	0.00	0.00	0.00	0.0
11	40.00	0.00	0.00	0.00	0.00	0.00	0.00	0.0
12	39.20	0.00	0.00	0.00	0.00	0.00	0.00	0.0
13	39.00	0.00	0.00	0.00	0.00	0.00	0.00	0.0
14	38.60	0.00	0.00	0.00	0.00	0.00	0.00	0.0
15	38.00	0.00	0.00	0.00	0.00	0.00	0.00	0.0
		0.00	0.00	0.00	28.47	14.30	14.30	20000
16	37.53	4.75	3.80	0.00	44.77	31.88	36.63	20000
17	37.05	9.50	7.60	0.00	61.06	37.63	47.13	20000
18	36.58	14.25	11.40	0.00	77.36	38.72	52.97	20000
19	36.10	19.00	15.21	0.00	93.67	39.22	58.22	20000
20	35.40	26.00	20.82	0.00	117.72	41.28	67.28	20000
		26.00	20.82	0.00	192.05	76.63	102.63	49999
21	35.10	29.00	23.52	0.00	207.96	70.12	99.12	49999
22	34.70	33.00	27.13	0.00	229.18	64.86	97.86	49999
		33.00	27.13	0.00	666.96	136.96	169.96	149997
23	34.15	38.50	32.65	0.00	713.19	103.02	141.52	149997
24	33.60	44.00	38.18	0.00	759.48	71.43	115.43	149997
25	33.15	45.00	46.20	0.00	826.72	37.78	82.78	149997
26	32.70	45.00	55.23	0.00	902.37	42.87	87.87	149997
27	32.60	45.00	57.24	0.00	919.19	48.28	93.28	149997
28	32.40	45.00	61.25	0.00	952.83	50.26	95.26	149997
29	30.60	45.00	97.45	0.00	1256.08	62.95	107.95	149997
30	28.80	45.00	133.76	0.00	1560.26	75.57	120.57	149997
31	25.60	45.00	198.63	0.00	2103.78	98.37	143.37	149997
32	22.80	45.00	255.77	0.00	2582.54	117.75	162.75	149997
33	20.00	55.00	303.28	6.47	2980.56	134.08	189.08	149997

(continued)

Stage No.8 Install strut or anchor no.2 at elevation 39.00

		RIGHT side						
			Effective stresses				Total	Adjusted
Node no.	Y coord	Water press.	Vertic -al	Active limit	Passive limit	Earth press.	earth press.	soil modulus
		kN/m2	kN/m2	kN/m2	kN/m2	kN/m2	kN/m2	kN/m2
1	46.10	0.00	0.00	0.00	0.00	0.00	0.00	0.0
2	45.50	0.00	0.00	0.00	0.00	0.00	0.00	0.0
		0.00	0.00	0.00	26.45	22.40	22.40	19999
3	44.75	0.00	17.66	0.00	93.78	18.92	18.92	19999
4	44.00	0.00	31.59	3.33	146.89	18.27	18.27	19999
5	43.50	0.00	40.72	6.16	181.68	17.79	17.79	19999
6	43.00	0.00	49.81	8.99	216.35	17.46	17.46	19999
7	42.50	0.00	58.89	11.81	250.97	18.37	18.37	19999
8	41.70	0.00	73.42	16.32	306.33	24.46	24.46	19999
9	41.10	6.00	78.30	17.83	324.96	27.56	33.56	19999
10	40.55	11.50	82.78	19.22	342.03	30.23	41.73	19999
11	40.00	17.00	87.25	20.61	359.07	32.77	49.77	19999
12	39.20	25.00	93.74	22.63	383.79	35.45	60.45	19999
		25.00	93.74	20.53	430.38	33.36	58.36	19999
13	39.00	27.00	95.35	20.99	437.32	33.82	60.82	19999
14	38.60	31.00	98.59	21.91	451.18	33.90	64.90	19999
15	38.00	37.00	103.42	23.29	471.91	33.89	70.89	19999
16	37.53	41.75	107.24	24.38	488.29	33.37	75.12	19999
17	37.05	45.00	112.55	25.89	511.05	30.68	75.68	19999
18	36.58	45.00	121.10	28.33	547.72	35.97	80.97	19999
19	36.10	45.00	129.64	30.76	584.34	41.42	86.42	19999
20	35.40	45.00	142.22	34.35	638.26	48.45	93.45	19999
		45.00	142.22	21.54	905.76	34.96	79.96	49997
21	35.10	45.00	147.90	22.85	939.18	33.24	78.24	49997
22	34.70	45.00	155.48	24.58	983.71	32.70	77.70	49997
		45.00	155.48	0.00	1742.26	24.37	69.37	149992
23	34.15	45.00	166.44	0.00	1834.07	11.65	56.65	149992
24	33.60	45.00	177.39	0.00	1925.81	12.59	57.59	149992
25	33.15	45.00	186.34	0.00	2000.83	52.17	97.17	149992
26	32.70	45.00	195.29	0.00	2075.81	169.36	214.36	149992
27	32.60	45.00	197.28	0.00	2092.47	49.65	94.65	149992
28	32.40	45.00	201.25	0.00	2125.78	50.30	95.30	149992
29	30.60	45.00	237.01	0.00	2425.38	62.96	107.96	149992
30	28.80	45.00	272.74	0.91	2724.73	75.65	120.65	149992
31	25.60	45.00	336.24	12.47	3256.72	98.37	143.37	149992
32	22.80	45.00	391.81	22.58	3722.32	117.77	162.77	149992
33	20.00	55.00	437.42	30.89	4104.41	133.86	188.86	149992

Units: kN,m

Stage No.8 Install prop no.2 at elev. 39.00

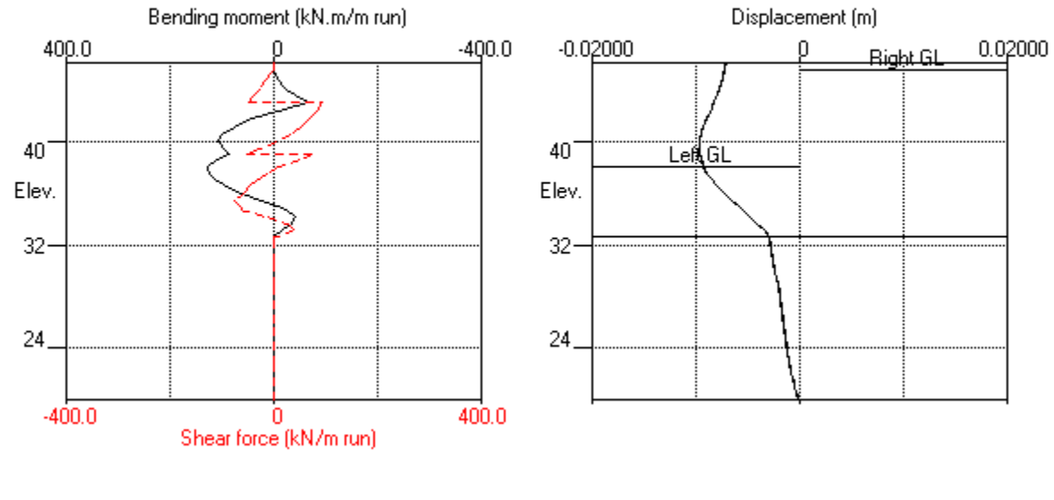

Stage No.8 Install prop no.2 at elev. 39.00

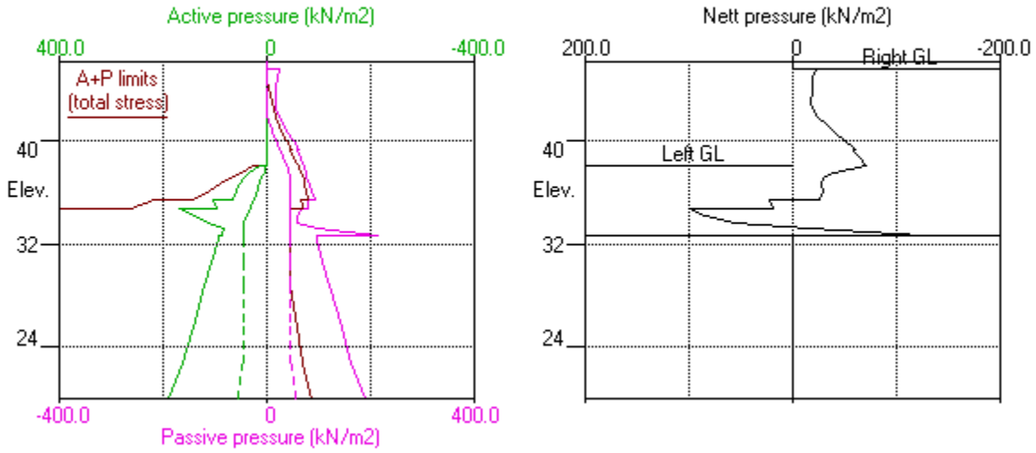

Units: kN,m

Stage No.10 Excav. to elev. 35.10 on LEFT side

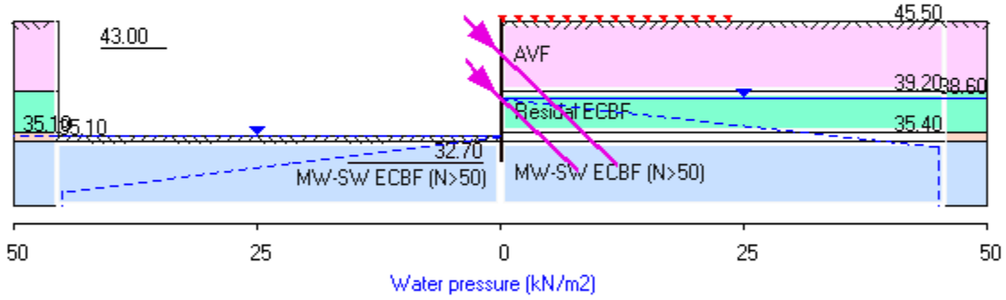

TONKIN + TAYLOR LTD | Sheet No.
Program: WALLAP Version 6.09 Revision A61.B78.R61 | Job No.
Licensed from GEOSOLVE | Made by :
Data filename/Run ID: 20261027_UoA_Section2_Anc_DeflectionEnvelope
New data set - contains default parameters | Date:28-10-2026
Please modify / add | Checked :

Units: kN,m

Stage No. 10 Excavate to elevation 35.10 on LEFT side

STABILITY ANALYSIS of Fully Embedded Wall according to Strength Factor method
Factor of safety on soil strength

Stage No.	Ground level Act.	Prop Pass.	FoS for toe elev. = 32.70 Prop Elev.	Factor of Safety	Moment equilib. at elev.	Toe elev. for FoS = 1.500 Toe elev.	Wall Penetr -ation	Direction of failure
10	35.10	45.50	More than one prop. No FoS calc.					

BENDING MOMENT and DISPLACEMENT ANALYSIS of Fully Embedded Wall
Analysis options
2-D finite element model. Active limit arching modelled.
Soil deformations are elastic until the active or passive limit is reached
Open Tension Crack analysis - No

Length of wall perpendicular to section = 1000.00m

Rigid boundaries: Left side 40.00m from wall Rough
Right side 40.00m from wall Rough
Lower boundary at elevation 20.00m Rough
Soil-wall interface Smooth

*** Wall displacements reset to zero at stage 3

Node no.	Y coord	Nett pressure kN/m2	Wall disp. m	Wall rotation rad.	Shear force kN/m	Bending moment kN.m/m	Prop forces kN/m	EI of wall kN.m2/m
1	46.10	0.00	-0.007	5.33E-04	0.0	0.0		291880
2	45.50	0.00	-0.007	5.33E-04	0.0	0.0		291880
		-25.19	-0.007	5.33E-04	0.0	-0.0		
3	44.75	-21.44	-0.008	5.43E-04	-17.5	-7.9		291880
4	44.00	-20.44	-0.008	5.90E-04	-33.2	-27.8		291880
5	43.50	-19.66	-0.008	6.55E-04	-43.2	-47.1		291880
6	43.00	-19.08	-0.009	7.58E-04	-52.9	-71.4	142.3	291880
		-19.08	-0.009	7.58E-04	89.4	-71.4		
7	42.50	-19.67	-0.009	8.46E-04	79.8	-29.3		291880
8	41.70	-25.40	-0.010	8.53E-04	61.7	27.1		291880
9	41.10	-30.61	-0.010	7.68E-04	44.9	59.1		291880
10	40.55	-35.11	-0.011	6.42E-04	26.8	78.9		291880
11	40.00	-39.19	-0.011	4.89E-04	6.4	88.0		291880
12	39.20	-44.47	-0.011	2.66E-04	-27.1	79.8		291880
		-42.38	-0.011	2.66E-04	-27.1	79.8		
13	39.00	-42.74	-0.011	2.16E-04	-35.6	73.5	131.8	291880
		-42.74	-0.011	2.16E-04	96.3	73.5		
14	38.60	-43.55	-0.011	9.48E-05	79.0	108.5		291880
15	38.00	-48.23	-0.011	-1.63E-04	51.5	147.6		291880
16	37.53	-51.05	-0.011	-4.14E-04	27.9	165.8		291880
17	37.05	-51.31	-0.011	-6.87E-04	3.6	172.8		291880
18	36.58	-58.42	-0.011	-9.62E-04	-22.5	168.5		291880
19	36.10	-65.88	-0.010	-1.22E-03	-52.0	151.0		291880
20	35.40	-77.70	-0.009	-1.52E-03	-102.2	97.7		291880
		-50.49	-0.009	-1.52E-03	-102.2	97.7		
21	35.10	-52.82	-0.009	-1.60E-03	-117.7	64.8		291880
		16.86	-0.009	-1.60E-03	-117.7	64.8		
22	34.70	21.65	-0.008	-1.66E-03	-110.0	19.0		291880
		147.06	-0.008	-1.66E-03	-110.0	19.0		
23	34.15	106.68	-0.007	-1.67E-03	-40.3	-19.3		291880

Run ID. 20261027_UoA_Section2_Anc_DeflectionEnvelope | Sheet No.
New data set - contains default parameters | Date:28-10-2026
Please modify / add | Checked :

(continued)

Stage No.10 Excavate to elevation 35.10 on LEFT side

Node no.	Y coord	Nett pressure	Wall disp.	Wall rotation	Shear force	Bending moment	Prop forces	EI of wall
		kN/m2	m	rad.	kN/m	kN.m/m	kN/m	kN.m2/m
24	33.60	71.55	-0.006	-1.63E-03	8.7	-25.1		291880
25	33.15	10.76	-0.005	-1.60E-03	27.3	-13.9		291880
26	32.70	-107.25	-0.005	-1.59E-03	5.6	-0.0		0
27	32.60	-1.57	-0.005	0	0.1	0.0		0
28	32.40	-3.23	-0.005	0	-0.4	0.0		0
29	30.60	1.29	-0.004	0	-2.1	0.0		0
30	28.80	0.29	-0.003	0	-0.7	0.0		0
31	25.60	-0.01	-0.002	0	-0.2	0.0		0
32	22.80	-0.03	-0.001	0	-0.3	0.0		0
33	20.00	0.22	-0.000	0	-0.0	0.0		---

At elev. 43.00 Prop force = 142.3 kN/m run (horiz.)
= 201.3 kN/m run (inclined)
At elev. 39.00 Prop force = 131.8 kN/m run (horiz.)
= 186.4 kN/m run (inclined)

	LEFT side						
		Effective stresses				Total earth	Adjusted soil
Node no.	Y coord	Water press.	Vertic -al	Active limit	Passive limit	Earth press.	press.	modulus
		kN/m2	kN/m2	kN/m2	kN/m2	kN/m2	kN/m2	kN/m2
1	46.10	0.00	0.00	0.00	0.00	0.00	0.00	0.0
2	45.50	0.00	0.00	0.00	0.00	0.00	0.00	0.0
3	44.75	0.00	0.00	0.00	0.00	0.00	0.00	0.0
4	44.00	0.00	0.00	0.00	0.00	0.00	0.00	0.0
5	43.50	0.00	0.00	0.00	0.00	0.00	0.00	0.0
6	43.00	0.00	0.00	0.00	0.00	0.00	0.00	0.0
7	42.50	0.00	0.00	0.00	0.00	0.00	0.00	0.0
8	41.70	0.00	0.00	0.00	0.00	0.00	0.00	0.0
9	41.10	0.00	0.00	0.00	0.00	0.00	0.00	0.0
10	40.55	0.00	0.00	0.00	0.00	0.00	0.00	0.0
11	40.00	0.00	0.00	0.00	0.00	0.00	0.00	0.0
12	39.20	0.00	0.00	0.00	0.00	0.00	0.00	0.0
13	39.00	0.00	0.00	0.00	0.00	0.00	0.00	0.0
14	38.60	0.00	0.00	0.00	0.00	0.00	0.00	0.0
15	38.00	0.00	0.00	0.00	0.00	0.00	0.00	0.0
16	37.53	0.00	0.00	0.00	0.00	0.00	0.00	0.0
17	37.05	0.00	0.00	0.00	0.00	0.00	0.00	0.0
18	36.58	0.00	0.00	0.00	0.00	0.00	0.00	0.0
19	36.10	0.00	0.00	0.00	0.00	0.00	0.00	0.0
20	35.40	0.00	0.00	0.00	0.00	0.00	0.00	0.0
21	35.10	0.00	0.00	0.00	0.00	0.00	0.00	0.0
		0.00	0.00	0.00	69.68	69.68	69.68p	49999
22	34.70	3.60	4.00	0.00	93.19	74.88	78.48	49999
		3.60	4.00	0.00	473.16	182.46	186.06	149998
23	34.15	8.55	10.05	0.00	523.85	142.63	151.18	149998
24	33.60	13.50	16.10	0.00	574.57	103.05	116.55	149998
25	33.15	17.55	21.06	0.00	616.08	60.71	78.26	149998
26	32.70	21.60	26.02	0.00	657.62	60.02	81.62	149998
27	32.60	22.50	27.12	0.00	666.85	55.05	77.55	149998
28	32.40	24.30	29.32	0.00	685.33	54.24	78.54	149998
29	30.60	40.50	49.21	0.00	851.95	58.19	98.69	149998
30	28.80	45.00	80.90	0.00	1117.45	67.18	112.18	149998
31	25.60	50.00	140.60	0.00	1617.59	87.99	137.99	149998
32	22.80	78.00	169.68	0.00	1861.21	97.95	175.95	149998
33	20.00	106.00	199.25	0.00	2108.96	108.24	214.24	149998

(continued)

Stage No.10 Excavate to elevation 35.10 on LEFT side

		RIGHT side						
			Effective stresses				Total	Adjusted
Node no.	Y coord	Water press.	Vertic -al	Active limit	Passive limit	Earth press.	earth press.	soil modulus
		kN/m2	kN/m2	kN/m2	kN/m2	kN/m2	kN/m2	kN/m2
1	46.10	0.00	0.00	0.00	0.00	0.00	0.00	0.0
2	45.50	0.00	0.00	0.00	0.00	0.00	0.00	0.0
		0.00	0.00	0.00	26.45	25.19	25.19	19999
3	44.75	0.00	17.66	0.00	93.78	21.44	21.44	19999
4	44.00	0.00	31.59	3.33	146.89	20.44	20.44	19999
5	43.50	0.00	40.72	6.16	181.68	19.66	19.66	19999
6	43.00	0.00	49.81	8.99	216.35	19.08	19.08	19999
7	42.50	0.00	58.89	11.81	250.97	19.67	19.67	19999
8	41.70	0.00	73.42	16.32	306.33	25.40	25.40	19999
9	41.10	0.00	84.30	19.70	347.84	30.61	30.61	19999
10	40.55	0.00	94.28	22.80	385.87	35.11	35.11	19999
11	40.00	0.00	104.25	25.89	423.88	39.19	39.19	19999
12	39.20	0.00	118.74	30.39	479.10	44.47	44.47	19999
		0.00	118.74	27.65	537.57	42.38	42.38	19999
13	39.00	0.00	122.35	28.69	553.08	42.74	42.74	19999
14	38.60	0.00	129.59	30.75	584.09	43.55	43.55	19999
15	38.00	6.00	134.42	32.13	604.83	42.23	48.23	19999
16	37.53	10.75	138.24	33.22	621.20	40.30	51.05	19999
17	37.05	15.50	142.05	34.30	637.54	35.81	51.31	19999
18	36.58	20.25	145.85	35.38	653.84	38.17	58.42	19999
19	36.10	25.00	149.64	36.47	670.10	40.88	65.88	19999
20	35.40	32.00	155.22	38.05	694.00	45.70	77.70	19999
		32.00	155.22	24.52	982.18	18.49	50.49A	49997
21	35.10	35.00	157.90	25.14	997.96	17.82	52.82A	49997
22	34.70	39.00	161.48	25.95	1018.98	17.83	56.83A	49997
		39.00	161.48	0.00	1792.53	0.00	39.00a	149992
23	34.15	44.50	166.94	0.00	1838.26	0.00	44.50a	149992
24	33.60	45.00	177.39	0.00	1925.81	0.00	45.00a	149992
25	33.15	45.00	186.34	0.00	2000.83	22.50	67.50	149992
26	32.70	45.00	195.29	0.00	2075.81	143.87	188.87	149992
27	32.60	45.00	197.28	0.00	2092.47	34.12	79.12	149992
28	32.40	45.00	201.25	0.00	2125.78	36.77	81.77	149992
29	30.60	45.00	237.01	0.00	2425.38	52.40	97.40	149992
30	28.80	45.00	272.74	0.91	2724.73	66.89	111.89	149992
31	25.60	50.00	331.24	11.56	3214.83	88.00	138.00	149992
32	22.80	78.00	358.81	16.58	3445.84	97.97	175.97	149992
33	20.00	106.00	386.42	21.60	3677.12	108.02	214.02	149992

Legend: 45.00 a Soil pressure at active limit
69.68 p Soil pressure at passive limit
56.83 A Arching - soil pressure below active limit

Units: kN,m

Stage No.10 Excav. to elev. 35.10 on LEFT side

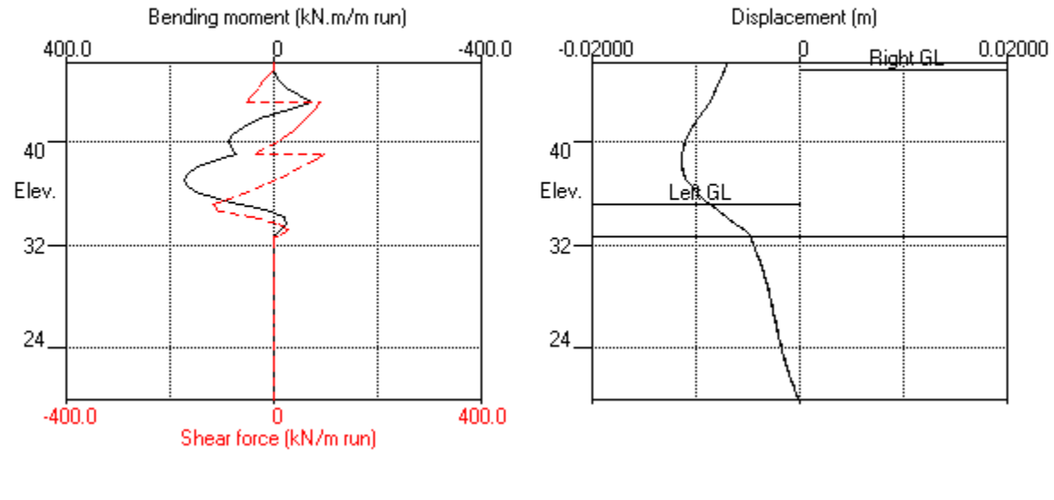

Stage No.10 Excav. to elev. 35.10 on LEFT side

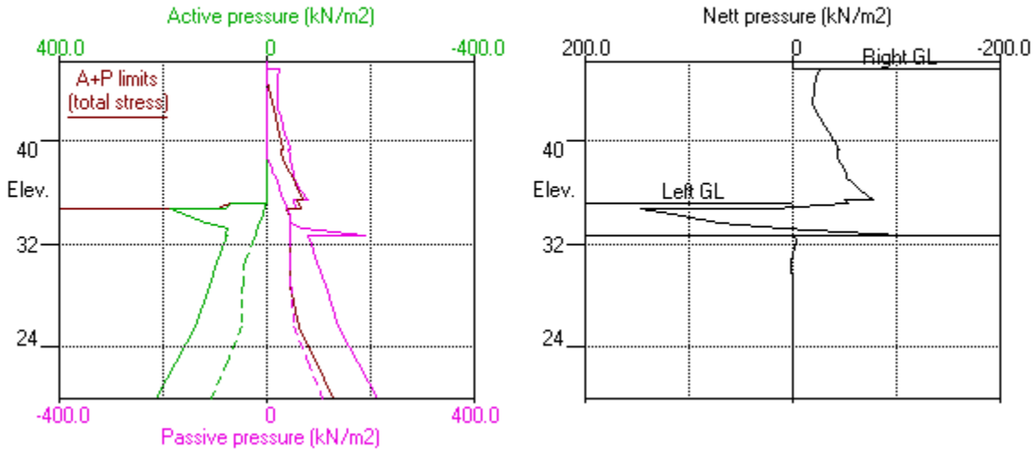

Units: kN,m

Stage No.11 Fill to elev. 36.10 on LEFT side

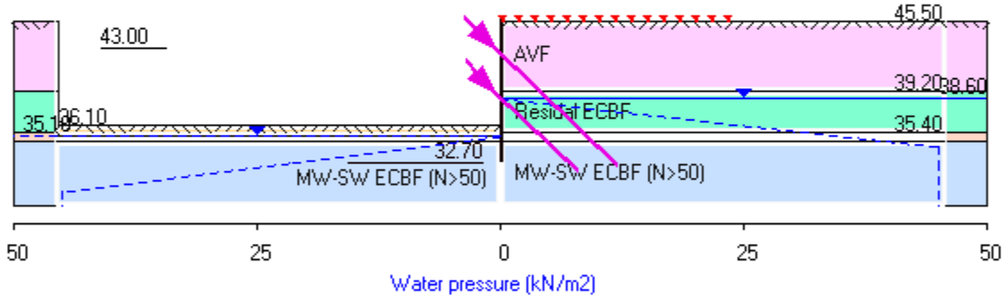

TONKIN + TAYLOR LTD | Sheet No.
Program: WALLAP Version 6.09 Revision A61.B78.R61 | Job No.
Licensed from GEOSOLVE | Made by :
Data filename/Run ID: 20261027_UoA_Section2_Anc_DeflectionEnvelope
New data set - contains default parameters | Date:28-10-2026
Please modify / add | Checked :

Units: kN,m

Stage No. 11 Fill to elevation 36.10 on LEFT side with soil type 5

STABILITY ANALYSIS of Fully Embedded Wall according to Strength Factor method
Factor of safety on soil strength

Stage No.	Ground level Act.	Prop Pass.	FoS for toe elev. = 32.70 Prop Elev.	Factor of Safety	Moment equilib. at elev.	Toe elev. for FoS = 1.500 Toe elev.	Wall Penetr -ation	Direction of failure
11	36.10	45.50	More than one prop. No FoS calc.					

BENDING MOMENT and DISPLACEMENT ANALYSIS of Fully Embedded Wall
Analysis options
2-D finite element model. Active limit arching modelled.
Soil deformations are elastic until the active or passive limit is reached
Open Tension Crack analysis - No

Length of wall perpendicular to section = 1000.00m
Rigid boundaries: Left side 40.00m from wall Rough
Right side 40.00m from wall Rough
Lower boundary at elevation 20.00m Rough
Soil-wall interface Smooth

*** Wall displacements reset to zero at stage 3

Node no.	Y coord	Nett pressure kN/m2	Wall disp. m	Wall rotation rad.	Shear force kN/m	Bending moment kN.m/m	Prop forces kN/m	EI of wall kN.m2/m
1	46.10	0.00	-0.007	5.19E-04	0.0	0.0		291880
2	45.50	0.00	-0.007	5.19E-04	0.0	0.0		291880
		-25.02	-0.007	5.19E-04	0.0	-0.0		
3	44.75	-21.29	-0.008	5.29E-04	-17.4	-7.9		291880
4	44.00	-20.31	-0.008	5.75E-04	-33.0	-27.6		291880
5	43.50	-19.56	-0.008	6.40E-04	-42.9	-46.8		291880
6	43.00	-19.00	-0.009	7.42E-04	-52.6	-70.9	142.1	291880
		-19.00	-0.009	7.42E-04	89.5	-70.9		
7	42.50	-19.62	-0.009	8.30E-04	79.9	-28.7		291880
8	41.70	-25.37	-0.010	8.35E-04	61.9	27.7		291880
9	41.10	-30.61	-0.010	7.49E-04	45.1	59.8		291880
10	40.55	-35.14	-0.011	6.21E-04	27.0	79.7		291880
11	40.00	-39.26	-0.011	4.67E-04	6.5	88.9		291880
12	39.20	-44.57	-0.011	2.42E-04	-27.0	80.7		291880
		-42.48	-0.011	2.42E-04	-27.0	80.7		
13	39.00	-42.87	-0.011	1.90E-04	-35.5	74.5	131.1	291880
		-42.87	-0.011	1.90E-04	95.6	74.5		
14	38.60	-43.72	-0.011	6.83E-05	78.3	109.2		291880
15	38.00	-48.45	-0.011	-1.90E-04	50.6	147.8		291880
16	37.53	-51.32	-0.011	-4.41E-04	26.9	165.5		291880
17	37.05	-51.63	-0.011	-7.13E-04	2.5	172.1		291880
18	36.58	-58.79	-0.010	-9.87E-04	-23.7	167.2		291880
19	36.10	-66.30	-0.010	-1.24E-03	-53.5	149.0		291880
20	35.40	-76.07	-0.009	-1.53E-03	-103.3	94.9		291880
		-49.41	-0.009	-1.53E-03	-103.3	94.9		
21	35.10	-50.90	-0.008	-1.62E-03	-118.3	61.7		291880
		21.67	-0.008	-1.62E-03	-118.3	61.7		
22	34.70	26.39	-0.008	-1.67E-03	-108.7	16.1		291880
		147.95	-0.008	-1.67E-03	-108.7	16.1		
23	34.15	106.81	-0.007	-1.67E-03	-38.7	-21.3		291880

(continued)

Stage No.11 Fill to elevation 36.10 on LEFT side with soil type 5

Node no.	Y coord	Nett pressure	Wall disp.	Wall rotation	Shear force	Bending moment	Prop forces	EI of wall
		kN/m2	m	rad.	kN/m	kN.m/m	kN/m	kN.m2/m
24	33.60	71.16	-0.006	-1.63E-03	10.3	-26.3		291880
25	33.15	9.81	-0.005	-1.60E-03	28.5	-14.3		291880
26	32.70	-110.96	-0.004	-1.59E-03	5.7	-0.0		0
27	32.60	-1.57	-0.004	0	0.1	0.0		0
28	32.40	-3.24	-0.004	0	-0.4	0.0		0
29	30.60	1.29	-0.004	0	-2.1	0.0		0
30	28.80	0.29	-0.003	0	-0.7	0.0		0
31	25.60	-0.00	-0.002	0	-0.2	0.0		0
32	22.80	-0.02	-0.001	0	-0.3	0.0		0
33	20.00	0.22	-0.000	0	-0.0	0.0		---

At elev. 43.00 Prop force = 142.1 kN/m run (horiz.)
= 200.9 kN/m run (inclined)

At elev. 39.00 Prop force = 131.1 kN/m run (horiz.)
= 185.5 kN/m run (inclined)

LEFT side

Node no.	Y coord	Water press.	Effective stresses Vertic -al	Active limit	Passive limit	Earth press.	Total earth press.	Adjusted soil modulus
		kN/m2	kN/m2	kN/m2	kN/m2	kN/m2	kN/m2	kN/m2
1	46.10	0.00	0.00	0.00	0.00	0.00	0.00	0.0
2	45.50	0.00	0.00	0.00	0.00	0.00	0.00	0.0
3	44.75	0.00	0.00	0.00	0.00	0.00	0.00	0.0
4	44.00	0.00	0.00	0.00	0.00	0.00	0.00	0.0
5	43.50	0.00	0.00	0.00	0.00	0.00	0.00	0.0
6	43.00	0.00	0.00	0.00	0.00	0.00	0.00	0.0
7	42.50	0.00	0.00	0.00	0.00	0.00	0.00	0.0
8	41.70	0.00	0.00	0.00	0.00	0.00	0.00	0.0
9	41.10	0.00	0.00	0.00	0.00	0.00	0.00	0.0
10	40.55	0.00	0.00	0.00	0.00	0.00	0.00	0.0
11	40.00	0.00	0.00	0.00	0.00	0.00	0.00	0.0
12	39.20	0.00	0.00	0.00	0.00	0.00	0.00	0.0
13	39.00	0.00	0.00	0.00	0.00	0.00	0.00	0.0
14	38.60	0.00	0.00	0.00	0.00	0.00	0.00	0.0
15	38.00	0.00	0.00	0.00	0.00	0.00	0.00	0.0
16	37.53	0.00	0.00	0.00	0.00	0.00	0.00	0.0
17	37.05	0.00	0.00	0.00	0.00	0.00	0.00	0.0
18	36.58	0.00	0.00	0.00	0.00	0.00	0.00	0.0
19	36.10	0.00	0.00	0.00	0.00	0.00	0.00	0.0
		0.00	0.00	0.00	0.00	0.00	0.00	149998
20	35.40	0.00	14.00	2.00	175.94	2.00	2.00a	149998
21	35.10	0.00	20.00	2.86	251.35	2.86	2.86a	149998
		0.00	20.00	0.00	187.26	75.42	75.42	49999
22	34.70	3.60	24.00	0.00	210.79	80.60	84.20	49999
		3.60	24.00	0.00	640.74	186.26	189.86	149998
23	34.15	8.55	30.06	0.00	691.48	146.08	154.63	149998
24	33.60	13.50	36.12	0.00	742.24	106.25	119.75	149998
25	33.15	17.55	41.08	0.00	783.81	63.63	81.18	149998
26	32.70	21.60	46.04	0.00	825.40	61.56	83.16	149998
27	32.60	22.50	47.15	0.00	834.65	58.44	80.94	149998
28	32.40	24.30	49.36	0.00	853.16	57.63	81.93	149998
29	30.60	40.50	69.28	0.00	1020.10	61.57	102.07	149998
30	28.80	45.00	101.02	0.00	1286.00	70.56	115.56	149998
31	25.60	50.00	160.80	0.00	1786.84	91.38	141.38	149998
32	22.80	78.00	189.93	0.00	2030.88	101.34	179.34	149998
33	20.00	106.00	219.51	0.00	2278.71	111.63	217.63	149998

(continued)

Stage No.11 Fill to elevation 36.10 on LEFT side with soil type 5

		RIGHT side						
			Effective stresses				Total	Adjusted
Node no.	Y coord	Water press.	Vertic -al	Active limit	Passive limit	Earth press.	earth press.	soil modulus
		kN/m2	kN/m2	kN/m2	kN/m2	kN/m2	kN/m2	kN/m2
1	46.10	0.00	0.00	0.00	0.00	0.00	0.00	0.0
2	45.50	0.00	0.00	0.00	0.00	0.00	0.00	0.0
		0.00	0.00	0.00	26.45	25.02	25.02	19999
3	44.75	0.00	17.66	0.00	93.78	21.29	21.29	19999
4	44.00	0.00	31.59	3.33	146.89	20.31	20.31	19999
5	43.50	0.00	40.72	6.16	181.68	19.56	19.56	19999
6	43.00	0.00	49.81	8.99	216.35	19.00	19.00	19999
7	42.50	0.00	58.89	11.81	250.97	19.62	19.62	19999
8	41.70	0.00	73.42	16.32	306.33	25.37	25.37	19999
9	41.10	0.00	84.30	19.70	347.84	30.61	30.61	19999
10	40.55	0.00	94.28	22.80	385.87	35.14	35.14	19999
11	40.00	0.00	104.25	25.89	423.88	39.26	39.26	19999
12	39.20	0.00	118.74	30.39	479.10	44.57	44.57	19999
		0.00	118.74	27.65	537.57	42.48	42.48	19999
13	39.00	0.00	122.35	28.69	553.08	42.87	42.87	19999
14	38.60	0.00	129.59	30.75	584.09	43.72	43.72	19999
15	38.00	6.00	134.42	32.13	604.83	42.45	48.45	19999
16	37.53	10.75	138.24	33.22	621.20	40.57	51.32	19999
17	37.05	15.50	142.05	34.30	637.54	36.13	51.63	19999
18	36.58	20.25	145.85	35.38	653.84	38.54	58.79	19999
19	36.10	25.00	149.64	36.47	670.10	41.30	66.30	19999
20	35.40	32.00	155.22	38.05	694.00	46.07	78.07	19999
		32.00	155.22	24.52	982.18	19.40	51.40A	49997
21	35.10	35.00	157.90	25.14	997.96	18.75	53.75A	49997
22	34.70	39.00	161.48	25.95	1018.98	18.80	57.80A	49997
		39.00	161.48	0.00	1792.53	2.91	41.91	149992
23	34.15	44.50	166.94	0.00	1838.26	3.32	47.82	149992
24	33.60	45.00	177.39	0.00	1925.81	3.59	48.59	149992
25	33.15	45.00	186.34	0.00	2000.83	26.37	71.37	149992
26	32.70	45.00	195.29	0.00	2075.81	149.12	194.12	149992
27	32.60	45.00	197.28	0.00	2092.47	37.51	82.51	149992
28	32.40	45.00	201.25	0.00	2125.78	40.16	85.16	149992
29	30.60	45.00	237.01	0.00	2425.38	55.78	100.78	149992
30	28.80	45.00	272.74	0.91	2724.73	70.27	115.27	149992
31	25.60	50.00	331.24	11.56	3214.83	91.38	141.38	149992
32	22.80	78.00	358.81	16.58	3445.84	101.36	179.36	149992
33	20.00	106.00	386.42	21.60	3677.12	111.41	217.41	149992

Legend: 2.86 a Soil pressure at active limit
123.45 p Soil pressure at passive limit
57.80 A Arching - soil pressure below active limit

Units: kN,m

Stage No.11 Fill to elev. 36.10 on LEFT side

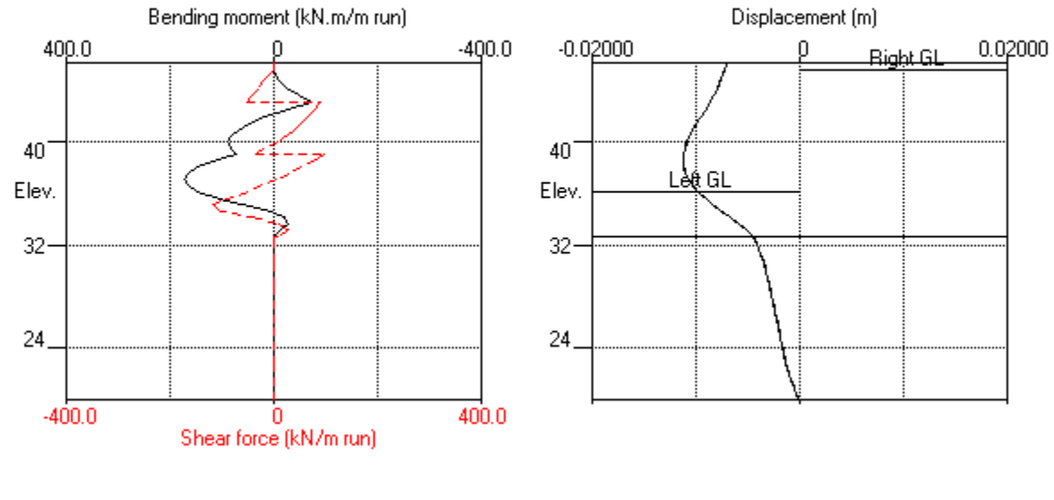

Stage No.11 Fill to elev. 36.10 on LEFT side

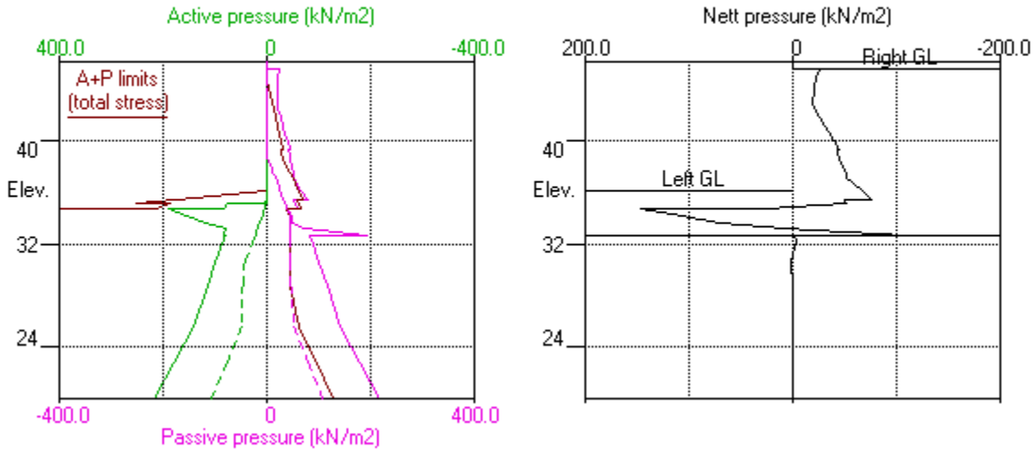

Units: kN,m

Stage No.14 Remove prop no.2 at elev. 39.00

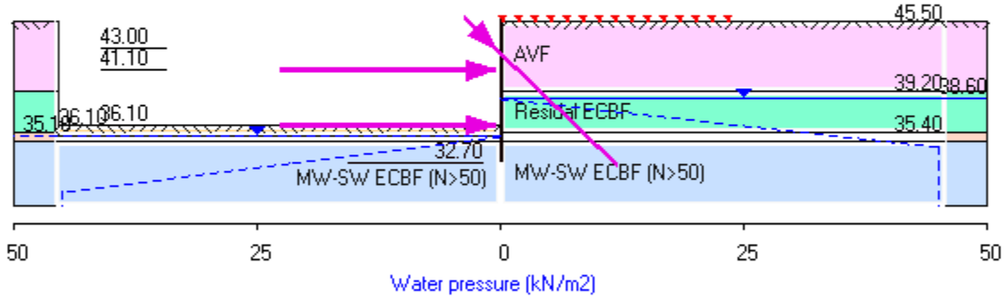

TONKIN + TAYLOR LTD | Sheet No.
Program: WALLAP Version 6.09 Revision A61.B78.R61 | Job No.
Licensed from GEOSOLVE | Made by :
Data filename/Run ID: 20261027_UoA_Section2_Anc_DeflectionEnvelope
New data set - contains default parameters | Date:28-10-2026
Please modify / add | Checked :

Units: kN,m

Stage No. 14 Remove strut or anchor no.2 at elevation 39.00

STABILITY ANALYSIS of Fully Embedded Wall according to Strength Factor method
Factor of safety on soil strength

Stage No.	Ground level Act.	Ground level Pass.	Prop Elev.	Factor of Safety	Moment equilib. at elev.	Toe elev.	Wall Penetr -ation	Direction of failure
				FoS for toe elev. = 32.70		**Toe elev. for FoS = 1.500**		
14	36.10	45.50		More than one prop. No FoS calc.				

BENDING MOMENT and DISPLACEMENT ANALYSIS of Fully Embedded Wall
Analysis options
2-D finite element model. Active limit arching modelled.
Soil deformations are elastic until the active or passive limit is reached
Open Tension Crack analysis - No

Length of wall perpendicular to section = 1000.00m

Rigid boundaries: Left side 40.00m from wall Rough
Right side 40.00m from wall Rough
Lower boundary at elevation 20.00m Rough
Soil-wall interface Smooth

*** Wall displacements reset to zero at stage 3

Node no.	Y coord	Nett pressure kN/m2	Wall disp. m	Wall rotation rad.	Shear force kN/m	Bending moment kN.m/m	Prop forces kN/m	EI of wall kN.m2/m
1	46.10	0.00	-0.006	7.71E-04	0.0	0.0		291880
2	45.50	0.00	-0.006	7.71E-04	0.0	0.0		291880
		-26.45	-0.006	7.71E-04	0.0	-0.0		
3	44.75	-24.68	-0.007	7.82E-04	-19.2	-8.3		291880
4	44.00	-23.03	-0.007	8.32E-04	-37.1	-30.3		291880
5	43.50	-21.73	-0.008	9.03E-04	-48.3	-51.9		291880
6	43.00	-20.71	-0.008	1.01E-03	-58.9	-78.9	141.3	291880
		-20.71	-0.008	1.01E-03	82.5	-78.9		
7	42.50	-20.75	-0.009	1.12E-03	72.1	-40.5		291880
8	41.70	-25.76	-0.010	1.16E-03	53.5	9.4		291880
9	41.10	-29.87	-0.011	1.12E-03	36.8	36.4	70.6	291880
		-29.87	-0.011	1.12E-03	107.4	36.4		
10	40.55	-32.83	-0.011	1.00E-03	90.2	90.7		291880
11	40.00	-35.04	-0.012	8.00E-04	71.5	135.0		291880
12	39.20	-38.99	-0.012	3.75E-04	41.9	180.2		291880
		-36.89	-0.012	3.75E-04	41.9	180.2		
13	39.00	-36.65	-0.012	2.51E-04	34.5	187.8		291880
14	38.60	-37.88	-0.012	-9.56E-06	19.6	198.6		291880
15	38.00	-43.50	-0.012	-4.17E-04	-4.8	203.1		291880
16	37.53	-47.59	-0.012	-7.37E-04	-26.4	195.0		291880
17	37.05	-49.09	-0.011	-1.03E-03	-49.4	176.7		291880
18	36.58	-57.33	-0.011	-1.29E-03	-74.6	147.5		291880
19	36.10	-65.67	-0.010	-1.50E-03	-103.9	105.3	63.2	291880
		-65.67	-0.010	-1.50E-03	-40.6	105.3		
20	35.40	-70.48	-0.009	-1.70E-03	-88.3	60.3		291880
		-42.96	-0.009	-1.70E-03	-88.3	60.3		
21	35.10	-51.15	-0.009	-1.75E-03	-102.4	31.9		291880
		21.85	-0.009	-1.75E-03	-102.4	31.9		
22	34.70	26.08	-0.008	-1.77E-03	-92.8	-7.3		291880
		147.02	-0.008	-1.77E-03	-92.8	-7.3		

(continued)

Stage No.14 Remove strut or anchor no.2 at elevation 39.00

Node no.	Y coord	Nett pressure	Wall disp.	Wall rotation	Shear force	Bending moment	Prop forces	EI of wall
		kN/m2	m	rad.	kN/m	kN.m/m	kN/m	kN.m2/m
23	34.15	102.40	-0.007	-1.73E-03	-24.2	-36.1		291880
24	33.60	65.12	-0.006	-1.67E-03	21.8	-33.8		291880
25	33.15	1.68	-0.005	-1.64E-03	36.9	-17.3		291880
26	32.70	-134.76	-0.004	-1.62E-03	6.9	-0.0		0
27	32.60	-1.57	-0.004	0	0.1	0.0		0
28	32.40	-3.24	-0.004	0	-0.4	0.0		0
29	30.60	1.29	-0.004	0	-2.1	0.0		0
30	28.80	0.29	-0.003	0	-0.7	0.0		0
31	25.60	-0.00	-0.002	0	-0.2	0.0		0
32	22.80	-0.02	-0.001	0	-0.3	0.0		0
33	20.00	0.22	-0.000	0	-0.0	0.0		---

At elev. 43.00 Prop force = 141.3 kN/m run (horiz.)
= 199.9 kN/m run (inclined)
At elev. 41.10 Prop force = 70.6 kN/m run
At elev. 36.10 Prop force = 63.2 kN/m run

LEFT side

Node no.	Y coord	Water press.	Effective stresses Vertic -al	Active limit	Passive limit	Earth press.	Total earth press.	Adjusted soil modulus
		kN/m2	kN/m2	kN/m2	kN/m2	kN/m2	kN/m2	kN/m2
1	46.10	0.00	0.00	0.00	0.00	0.00	0.00	0.0
2	45.50	0.00	0.00	0.00	0.00	0.00	0.00	0.0
3	44.75	0.00	0.00	0.00	0.00	0.00	0.00	0.0
4	44.00	0.00	0.00	0.00	0.00	0.00	0.00	0.0
5	43.50	0.00	0.00	0.00	0.00	0.00	0.00	0.0
6	43.00	0.00	0.00	0.00	0.00	0.00	0.00	0.0
7	42.50	0.00	0.00	0.00	0.00	0.00	0.00	0.0
8	41.70	0.00	0.00	0.00	0.00	0.00	0.00	0.0
9	41.10	0.00	0.00	0.00	0.00	0.00	0.00	0.0
10	40.55	0.00	0.00	0.00	0.00	0.00	0.00	0.0
11	40.00	0.00	0.00	0.00	0.00	0.00	0.00	0.0
12	39.20	0.00	0.00	0.00	0.00	0.00	0.00	0.0
13	39.00	0.00	0.00	0.00	0.00	0.00	0.00	0.0
14	38.60	0.00	0.00	0.00	0.00	0.00	0.00	0.0
15	38.00	0.00	0.00	0.00	0.00	0.00	0.00	0.0
16	37.53	0.00	0.00	0.00	0.00	0.00	0.00	0.0
17	37.05	0.00	0.00	0.00	0.00	0.00	0.00	0.0
18	36.58	0.00	0.00	0.00	0.00	0.00	0.00	0.0
19	36.10	0.00	0.00	0.00	0.00	0.00	0.00	0.0
		0.00	0.00	0.00	0.00	0.00	0.00	149998
20	35.40	0.00	14.00	2.00	175.94	7.02	7.02	149998
21	35.10	0.00	20.00	2.86	251.35	2.19	2.19A	149998
		0.00	20.00	0.00	187.26	75.20	75.20	49999
22	34.70	3.60	24.00	0.00	210.79	80.29	83.89	49999
		3.60	24.00	0.00	640.74	185.34	188.94	149998
23	34.15	8.55	30.06	0.00	691.48	143.84	152.39	149998
24	33.60	13.50	36.12	0.00	742.24	103.31	116.81	149998
25	33.15	17.55	41.08	0.00	783.81	59.67	77.22	149998
26	32.70	21.60	46.04	0.00	825.40	49.77	71.37	149998
27	32.60	22.50	47.15	0.00	834.65	58.55	81.05	149998
28	32.40	24.30	49.36	0.00	853.16	57.74	82.04	149998
29	30.60	40.50	69.28	0.00	1020.10	61.66	102.16	149998
30	28.80	45.00	101.02	0.00	1286.00	70.62	115.62	149998
31	25.60	50.00	160.80	0.00	1786.84	91.41	141.41	149998
32	22.80	78.00	189.93	0.00	2030.88	101.35	179.35	149998
33	20.00	106.00	219.51	0.00	2278.71	111.63	217.63	149998

(continued)

Stage No.14 Remove strut or anchor no.2 at elevation 39.00

		RIGHT side						
			Effective stresses				Total	Adjusted
Node no.	Y coord	Water press.	Vertic -al	Active limit	Passive limit	Earth press.	earth press.	soil modulus
		kN/m2	kN/m2	kN/m2	kN/m2	kN/m2	kN/m2	kN/m2
1	46.10	0.00	0.00	0.00	0.00	0.00	0.00	0.0
2	45.50	0.00	0.00	0.00	0.00	0.00	0.00	0.0
		0.00	0.00	0.00	26.45	26.45	26.45p	19999
3	44.75	0.00	17.66	0.00	93.78	24.68	24.68	19999
4	44.00	0.00	31.59	3.33	146.89	23.03	23.03	19999
5	43.50	0.00	40.72	6.16	181.68	21.73	21.73	19999
6	43.00	0.00	49.81	8.99	216.35	20.71	20.71	19999
7	42.50	0.00	58.89	11.81	250.97	20.75	20.75	19999
8	41.70	0.00	73.42	16.32	306.33	25.76	25.76	19999
9	41.10	0.00	84.30	19.70	347.84	29.87	29.87	19999
10	40.55	0.00	94.28	22.80	385.87	32.83	32.83	19999
11	40.00	0.00	104.25	25.89	423.88	35.04	35.04	19999
12	39.20	0.00	118.74	30.39	479.10	38.99	38.99	19999
		0.00	118.74	27.65	537.57	36.89	36.89	19999
13	39.00	0.00	122.35	28.69	553.08	36.65	36.65	19999
14	38.60	0.00	129.59	30.75	584.09	37.88	37.88	19999
15	38.00	6.00	134.42	32.13	604.83	37.50	43.50	19999
16	37.53	10.75	138.24	33.22	621.20	36.84	47.59	19999
17	37.05	15.50	142.05	34.30	637.54	33.59	49.09A	19999
18	36.58	20.25	145.85	35.38	653.84	37.08	57.33	19999
19	36.10	25.00	149.64	36.47	670.10	40.67	65.67	19999
20	35.40	32.00	155.22	38.05	694.00	45.50	77.50	19999
		32.00	155.22	24.52	982.18	17.98	49.98A	49997
21	35.10	35.00	157.90	25.14	997.96	18.35	53.35A	49997
22	34.70	39.00	161.48	25.95	1018.98	18.81	57.81A	49997
		39.00	161.48	0.00	1792.53	2.92	41.92	149992
23	34.15	44.50	166.94	0.00	1838.26	5.50	50.00	149992
24	33.60	45.00	177.39	0.00	1925.81	6.69	51.69	149992
25	33.15	45.00	186.34	0.00	2000.83	30.54	75.54	149992
26	32.70	45.00	195.29	0.00	2075.81	161.13	206.13	149992
27	32.60	45.00	197.28	0.00	2092.47	37.63	82.63	149992
28	32.40	45.00	201.25	0.00	2125.78	40.27	85.27	149992
29	30.60	45.00	237.01	0.00	2425.38	55.87	100.87	149992
30	28.80	45.00	272.74	0.91	2724.73	70.33	115.33	149992
31	25.60	50.00	331.24	11.56	3214.83	91.41	141.41	149992
32	22.80	78.00	358.81	16.58	3445.84	101.37	179.37	149992
33	20.00	106.00	386.42	21.60	3677.12	111.41	217.41	149992

Legend: 12.34 a Soil pressure at active limit
26.45 p Soil pressure at passive limit
57.81 A Arching - soil pressure below active limit

Units: kN,m

Stage No.14 Remove prop no.2 at elev. 39.00

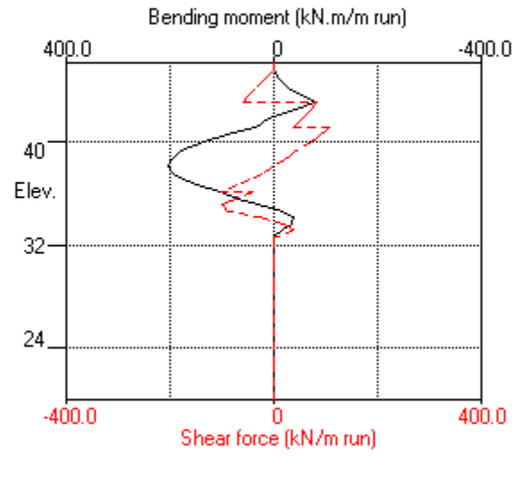

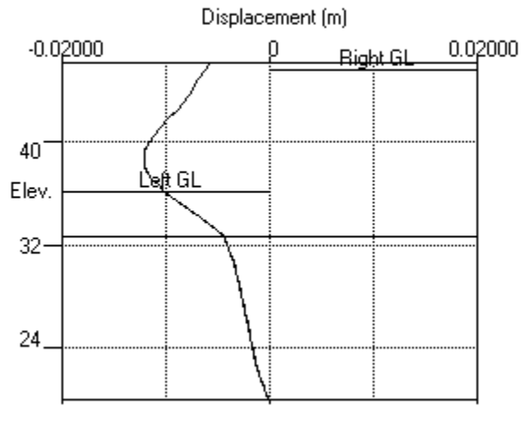

Stage No.14 Remove prop no.2 at elev. 39.00

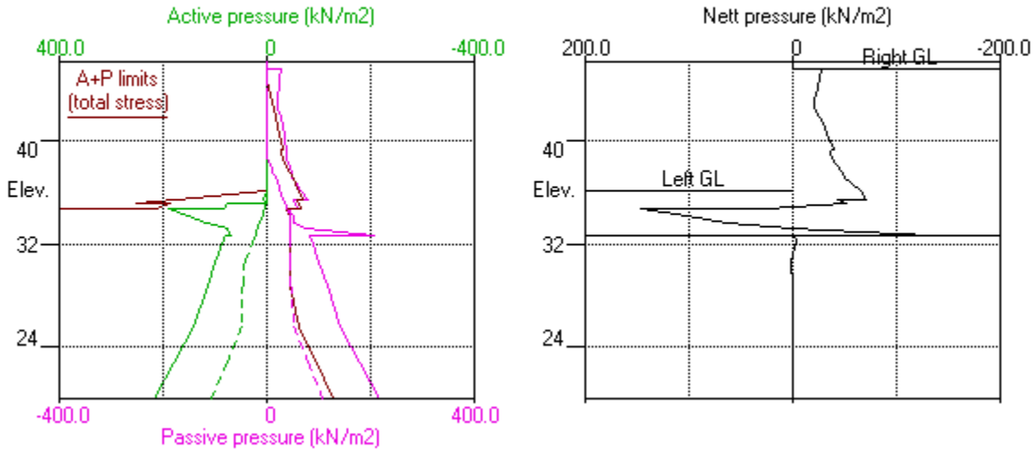

Units: kN,m

Stage No.15 Remove prop no.1 at elev. 43.00

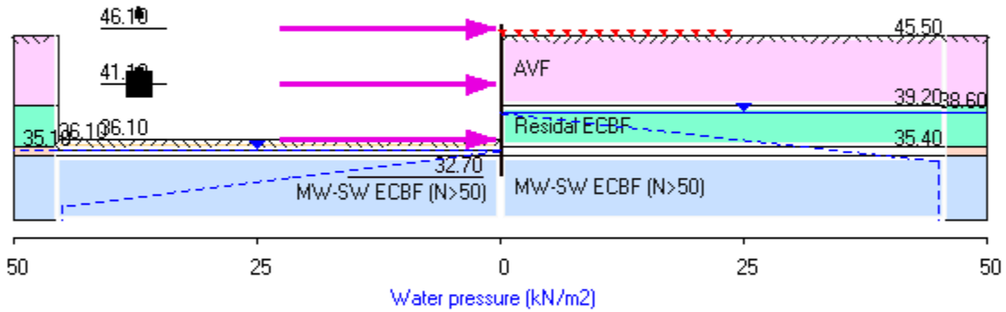

TONKIN + TAYLOR LTD | Sheet No.
Program: WALLAP Version 6.09 Revision A61.B78.R61 | Job No.
Licensed from GEOSOLVE | Made by :
Data filename/Run ID: 20261027_UoA_Section2_Anc_DeflectionEnvelope
New data set - contains default parameters | Date:28-10-2026
Please modify / add | Checked :

Units: kN,m

Stage No. 16 Remove strut or anchor no.1 at elevation 43.00

STABILITY ANALYSIS of Fully Embedded Wall according to Strength Factor method

Factor of safety on soil strength

Stage No.	Ground level Act.	Ground level Pass.	Prop Elev.	FoS for toe elev. = 32.70 Factor of Safety	Moment equilib. at elev.	Toe elev. for FoS = 1.500 Toe elev.	Wall Penetr -ation	Direction of failure
16	36.10	45.50	More than one prop. No FoS calc.					

BENDING MOMENT and DISPLACEMENT ANALYSIS of Fully Embedded Wall

Analysis options

2-D finite element model. Active limit arching modelled.
Soil deformations are elastic until the active or passive limit is reached
Open Tension Crack analysis - No

Length of wall perpendicular to section = 1000.00m

Rigid boundaries: Left side 40.00m from wall Rough
Right side 40.00m from wall Rough
Lower boundary at elevation 20.00m Rough
Soil-wall interface Smooth

*** Wall displacements reset to zero at stage 3

Node no.	Y coord	Nett pressure kN/m2	Wall disp. m	Wall rotation rad.	Shear force kN/m	Bending moment kN.m/m	Prop forces kN/m	EI of wall kN.m2/m
1	46.10	0.00	-0.006	1.28E-03	38.3	0.0	38.3	291880
2	45.50	0.00	-0.007	1.25E-03	38.3	23.0		291880
		-26.45	-0.007	1.25E-03	38.3	23.0		
3	44.75	-23.90	-0.008	1.17E-03	19.5	43.5		291880
4	44.00	-19.07	-0.009	1.05E-03	3.3	50.7		291880
5	43.50	-16.25	-0.009	9.68E-04	-5.5	49.8		291880
6	43.00	-14.96	-0.009	8.89E-04	-13.3	44.8		291880
7	42.50	-16.31	-0.010	8.21E-04	-21.1	36.1		291880
8	41.70	-23.55	-0.011	7.58E-04	-37.0	12.8		291880
9	41.10	-29.76	-0.011	7.63E-04	-53.0	-14.1	173.4	291880
		-29.76	-0.011	7.63E-04	120.4	-14.1		
10	40.55	-33.70	-0.011	7.36E-04	102.9	47.3		291880
11	40.00	-36.37	-0.012	6.03E-04	83.7	98.5		291880
12	39.20	-40.43	-0.012	2.65E-04	53.0	153.0		291880
		-38.33	-0.012	2.65E-04	53.0	153.0		
13	39.00	-38.11	-0.012	1.59E-04	45.3	162.8		291880
14	38.60	-39.26	-0.012	-7.03E-05	29.8	177.8		291880
15	38.00	-44.74	-0.012	-4.41E-04	4.6	188.1		291880
16	37.53	-48.64	-0.012	-7.40E-04	-17.5	184.4		291880
17	37.05	-49.96	-0.011	-1.02E-03	-41.0	170.2		291880
18	36.58	-58.04	-0.011	-1.28E-03	-66.6	144.9		291880
19	36.10	-66.28	-0.010	-1.48E-03	-96.1	106.4	56.5	291880
		-66.28	-0.010	-1.48E-03	-39.7	106.4		
20	35.40	-71.68	-0.009	-1.68E-03	-87.9	62.0		291880
		-44.83	-0.009	-1.68E-03	-87.9	62.0		
21	35.10	-51.99	-0.009	-1.73E-03	-102.5	33.6		291880
		21.17	-0.009	-1.73E-03	-102.5	33.6		
22	34.70	25.65	-0.008	-1.76E-03	-93.1	-5.7		291880
		145.72	-0.008	-1.76E-03	-93.1	-5.7		
23	34.15	101.90	-0.007	-1.72E-03	-25.0	-34.9		291880

(continued)

Stage No.16 Remove strut or anchor no.1 at elevation 43.00

Node no.	Y coord	Nett pressure	Wall disp.	Wall rotation	Shear force	Bending moment	Prop forces	EI of wall
		kN/m2	m	rad.	kN/m	kN.m/m	kN/m	kN.m2/m
24	33.60	65.12	-0.006	-1.67E-03	20.9	-33.1		291880
25	33.15	2.19	-0.005	-1.63E-03	36.1	-17.0		291880
26	32.70	-132.23	-0.004	-1.62E-03	6.8	-0.0		0
27	32.60	-1.57	-0.004	0	0.1	0.0		0
28	32.40	-3.24	-0.004	0	-0.4	0.0		0
29	30.60	1.29	-0.004	0	-2.1	0.0		0
30	28.80	0.29	-0.003	0	-0.7	0.0		0
31	25.60	-0.00	-0.002	0	-0.2	0.0		0
32	22.80	-0.02	-0.001	0	-0.3	0.0		0
33	20.00	0.22	-0.000	0	-0.0	0.0		---

At elev. 46.10 Prop force = 38.3 kN/m run
At elev. 41.10 Prop force = 173.4 kN/m run
At elev. 36.10 Prop force = 56.5 kN/m run

LEFT side

Node no.	Y coord	Water press.	Effective stresses Vertic -al	Active limit	Passive limit	Earth press.	Total earth press.	Adjusted soil modulus
		kN/m2	kN/m2	kN/m2	kN/m2	kN/m2	kN/m2	kN/m2
1	46.10	0.00	0.00	0.00	0.00	0.00	0.00	0.0
2	45.50	0.00	0.00	0.00	0.00	0.00	0.00	0.0
3	44.75	0.00	0.00	0.00	0.00	0.00	0.00	0.0
4	44.00	0.00	0.00	0.00	0.00	0.00	0.00	0.0
5	43.50	0.00	0.00	0.00	0.00	0.00	0.00	0.0
6	43.00	0.00	0.00	0.00	0.00	0.00	0.00	0.0
7	42.50	0.00	0.00	0.00	0.00	0.00	0.00	0.0
8	41.70	0.00	0.00	0.00	0.00	0.00	0.00	0.0
9	41.10	0.00	0.00	0.00	0.00	0.00	0.00	0.0
10	40.55	0.00	0.00	0.00	0.00	0.00	0.00	0.0
11	40.00	0.00	0.00	0.00	0.00	0.00	0.00	0.0
12	39.20	0.00	0.00	0.00	0.00	0.00	0.00	0.0
13	39.00	0.00	0.00	0.00	0.00	0.00	0.00	0.0
14	38.60	0.00	0.00	0.00	0.00	0.00	0.00	0.0
15	38.00	0.00	0.00	0.00	0.00	0.00	0.00	0.0
16	37.53	0.00	0.00	0.00	0.00	0.00	0.00	0.0
17	37.05	0.00	0.00	0.00	0.00	0.00	0.00	0.0
18	36.58	0.00	0.00	0.00	0.00	0.00	0.00	0.0
19	36.10	0.00	0.00	0.00	0.00	0.00	0.00	0.0
		0.00	0.00	0.00	0.00	0.00	0.00	149998
20	35.40	0.00	14.00	2.00	175.94	6.27	6.27	149998
21	35.10	0.00	20.00	2.86	251.35	1.97	1.97A	149998
		0.00	20.00	0.00	187.26	75.12	75.12	49999
22	34.70	3.60	24.00	0.00	210.79	80.23	83.83	49999
		3.60	24.00	0.00	640.74	185.16	188.76	149998
23	34.15	8.55	30.06	0.00	691.48	143.90	152.45	149998
24	33.60	13.50	36.12	0.00	742.24	103.55	117.05	149998
25	33.15	17.55	41.08	0.00	783.81	60.12	77.67	149998
26	32.70	21.60	46.04	0.00	825.40	51.21	72.81	149998
27	32.60	22.50	47.15	0.00	834.65	58.71	81.21	149998
28	32.40	24.30	49.36	0.00	853.16	57.86	82.16	149998
29	30.60	40.50	69.28	0.00	1020.10	61.74	102.24	149998
30	28.80	45.00	101.02	0.00	1286.00	70.66	115.66	149998
31	25.60	50.00	160.80	0.00	1786.84	91.44	141.44	149998
32	22.80	78.00	189.93	0.00	2030.88	101.38	179.38	149998
33	20.00	106.00	219.51	0.00	2278.71	111.68	217.68	149998

(continued)

Stage No.16 Remove strut or anchor no.1 at elevation 43.00

		RIGHT side						
			Effective stresses				Total	Adjusted
Node no.	Y coord	Water press.	Vertic -al	Active limit	Passive limit	Earth press.	earth press.	soil modulus
		kN/m2	kN/m2	kN/m2	kN/m2	kN/m2	kN/m2	kN/m2
1	46.10	0.00	0.00	0.00	0.00	0.00	0.00	0.0
2	45.50	0.00	0.00	0.00	0.00	0.00	0.00	0.0
		0.00	0.00	0.00	26.45	26.45	26.45p	19999
3	44.75	0.00	17.66	0.00	93.78	23.90	23.90	19999
4	44.00	0.00	31.59	3.33	146.89	19.07	19.07	19999
5	43.50	0.00	40.72	6.16	181.68	16.25	16.25	19999
6	43.00	0.00	49.81	8.99	216.35	14.96	14.96	19999
7	42.50	0.00	58.89	11.81	250.97	16.31	16.31	19999
8	41.70	0.00	73.42	16.32	306.33	23.55	23.55	19999
9	41.10	0.00	84.30	19.70	347.84	29.76	29.76	19999
10	40.55	0.00	94.28	22.80	385.87	33.70	33.70	19999
11	40.00	0.00	104.25	25.89	423.88	36.37	36.37	19999
12	39.20	0.00	118.74	30.39	479.10	40.43	40.43	19999
		0.00	118.74	27.65	537.57	38.33	38.33	19999
13	39.00	0.00	122.35	28.69	553.08	38.11	38.11	19999
14	38.60	0.00	129.59	30.75	584.09	39.26	39.26	19999
15	38.00	6.00	134.42	32.13	604.83	38.74	44.74	19999
16	37.53	10.75	138.24	33.22	621.20	37.89	48.64	19999
17	37.05	15.50	142.05	34.30	637.54	34.46	49.96	19999
18	36.58	20.25	145.85	35.38	653.84	37.79	58.04	19999
19	36.10	25.00	149.64	36.47	670.10	41.28	66.28	19999
20	35.40	32.00	155.22	38.05	694.00	45.95	77.95	19999
		32.00	155.22	24.52	982.18	19.11	51.11A	49997
21	35.10	35.00	157.90	25.14	997.96	18.96	53.96A	49997
22	34.70	39.00	161.48	25.95	1018.98	19.18	58.18A	49997
		39.00	161.48	0.00	1792.53	4.04	43.04	149992
23	34.15	44.50	166.94	0.00	1838.26	6.05	50.55	149992
24	33.60	45.00	177.39	0.00	1925.81	6.93	51.93	149992
25	33.15	45.00	186.34	0.00	2000.83	30.48	75.48	149992
26	32.70	45.00	195.29	0.00	2075.81	160.03	205.03	149992
27	32.60	45.00	197.28	0.00	2092.47	37.78	82.78	149992
28	32.40	45.00	201.25	0.00	2125.78	40.39	85.39	149992
29	30.60	45.00	237.01	0.00	2425.38	55.95	100.95	149992
30	28.80	45.00	272.74	0.91	2724.73	70.37	115.37	149992
31	25.60	50.00	331.24	11.56	3214.83	91.44	141.44	149992
32	22.80	78.00	358.81	16.58	3445.84	101.40	179.40	149992
33	20.00	106.00	386.42	21.60	3677.12	111.46	217.46	149992

Legend: 12.34 a Soil pressure at active limit
26.45 p Soil pressure at passive limit
58.18 A Arching - soil pressure below active limit

Units: kN,m

Stage No.16 Remove prop no.1 at elev. 43.00

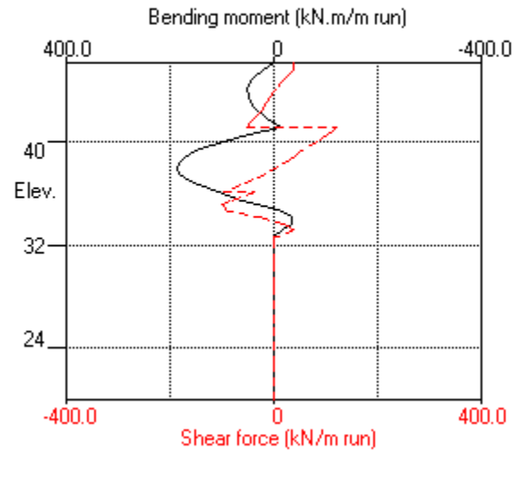

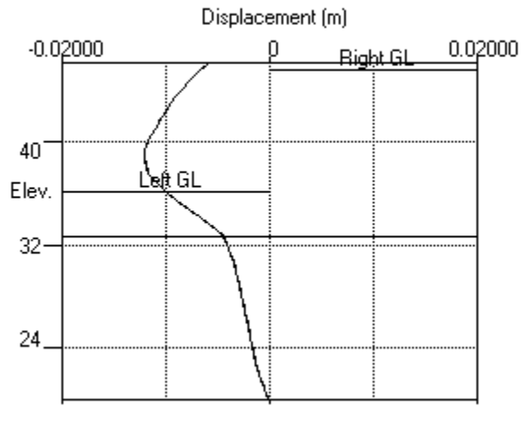

Stage No.16 Remove prop no.1 at elev. 43.00

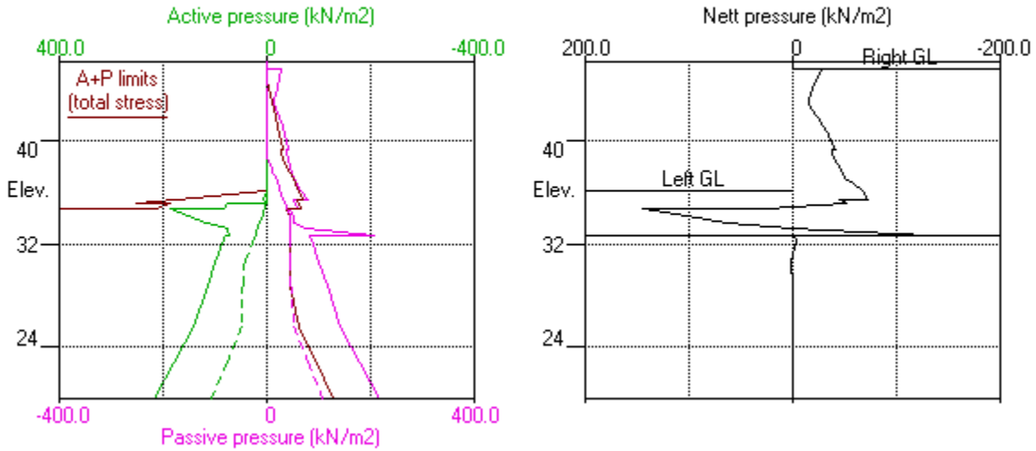

TONKIN + TAYLOR LTD | Sheet No.
Program: WALLAP Version 6.09 Revision A61.B78.R61 | Job No.
Licensed from GEOSOLVE | Made by :
Data filename/Run ID: 20261027_UoA_Section2_Anc_DeflectionEnvelope
New data set - contains default parameters | Date:28-10-2026
Please modify / add | Checked :

Units: kN,m

Stage No.17 Change EI of wall to 194590kN.m2/m run

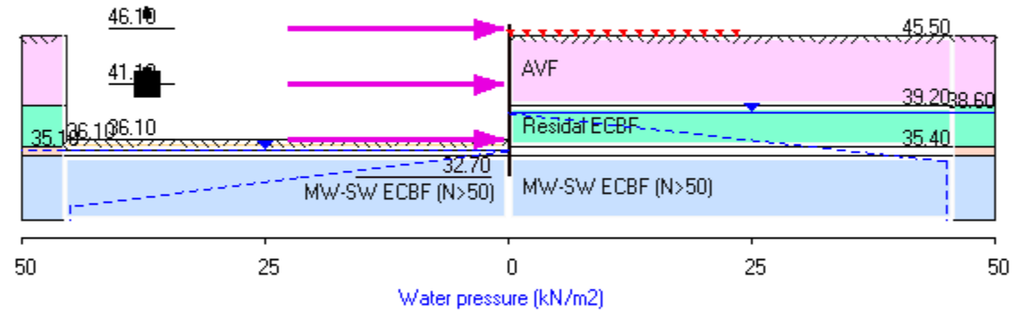

TONKIN + TAYLOR LTD | Sheet No.
Program: WALLAP Version 6.09 Revision A61.B78.R61 | Job No.
Licensed from GEOSOLVE | Made by :
Data filename/Run ID: 20261027_UoA_Section2_Anc_DeflectionEnvelope
New data set - contains default parameters | Date:28-10-2026
Please modify / add | Checked :

Units: kN,m

Stage No. 17 Change EI of wall to 194590 kN.m2/m run
Allow wall to relax with new modulus value

STABILITY ANALYSIS of Fully Embedded Wall according to Strength Factor method
Factor of safety on soil strength

Stage No.	Ground level Act.	Ground level Pass.	Prop Elev.	FoS for toe elev. = 32.70 Factor of Safety	Moment equilib. at elev.	Toe elev. for FoS = 1.500 Toe elev.	Wall Penetr -ation	Direction of failure
17	36.10	45.50	More than one prop. No FoS calc.					

BENDING MOMENT and DISPLACEMENT ANALYSIS of Fully Embedded Wall
Analysis options
2-D finite element model. Active limit arching modelled.
Soil deformations are elastic until the active or passive limit is reached
Open Tension Crack analysis - No

Length of wall perpendicular to section = 1000.00m
Rigid boundaries: Left side 40.00m from wall Rough
Right side 40.00m from wall Rough
Lower boundary at elevation 20.00m Rough
Soil-wall interface Smooth

*** Wall displacements reset to zero at stage 3

Node no.	Y coord	Nett pressure kN/m2	Wall disp. m	Wall rotation rad.	Shear force kN/m	Bending moment kN.m/m	Prop forces kN/m	EI of wall kN.m2/m
1	46.10	0.00	-0.006	1.33E-03	33.8	0.0	33.8	194590
2	45.50	0.00	-0.007	1.30E-03	33.8	21.0		194590
		-26.45	-0.007	1.30E-03	33.8	21.0		
3	44.75	-23.73	-0.008	1.19E-03	15.0	38.9		194590
4	44.00	-18.82	-0.009	1.04E-03	-0.9	43.5		194590
5	43.50	-16.16	-0.009	9.39E-04	-9.7	41.0		194590
6	43.00	-15.10	-0.009	8.52E-04	-17.5	34.4		194590
7	42.50	-16.80	-0.010	7.89E-04	-25.5	24.0		194590
8	41.70	-24.40	-0.011	7.66E-04	-42.0	-2.1		194590
9	41.10	-30.66	-0.011	8.38E-04	-58.5	-31.4	173.0	194590
		-30.66	-0.011	8.38E-04	114.5	-31.4		
10	40.55	-34.01	-0.011	8.66E-04	96.7	27.4		194590
11	40.00	-35.76	-0.012	7.44E-04	77.5	75.9		194590
12	39.20	-39.12	-0.012	3.67E-04	47.6	126.9		194590
		-37.02	-0.012	3.67E-04	47.6	126.9		
13	39.00	-36.31	-0.012	2.43E-04	40.2	135.9		194590
14	38.60	-37.23	-0.012	-2.69E-05	25.5	149.4		194590
15	38.00	-42.62	-0.012	-4.66E-04	1.6	158.2		194590
16	37.53	-46.66	-0.012	-8.18E-04	-19.6	153.6		194590
17	37.05	-48.34	-0.012	-1.14E-03	-42.2	138.9		194590
18	36.58	-56.92	-0.011	-1.42E-03	-67.2	113.4		194590
19	36.10	-65.70	-0.010	-1.63E-03	-96.3	75.1	73.7	194590
		-65.70	-0.010	-1.63E-03	-22.6	75.1		
20	35.40	-68.59	-0.009	-1.80E-03	-69.6	40.1		194590
		-41.06	-0.009	-1.80E-03	-69.6	40.1		
21	35.10	-54.07	-0.008	-1.84E-03	-83.9	16.2		194590
		20.02	-0.008	-1.84E-03	-83.9	16.2		
22	34.70	23.50	-0.008	-1.83E-03	-75.2	-17.4		194590
		139.27	-0.008	-1.83E-03	-75.2	-17.4		

(continued)

Stage No.17 Change EI of wall to 194590 kN.m2/m run
Allow wall to relax with new modulus value

Node no.	Y coord	Nett pressure	Wall disp.	Wall rotation	Shear force	Bending moment	Prop forces	EI of wall
		kN/m2	m	rad.	kN/m	kN.m/m	kN/m	kN.m2/m
23	34.15	90.42	-0.007	-1.75E-03	-12.0	-39.9		194590
24	33.60	54.04	-0.006	-1.64E-03	27.7	-34.3		194590
25	33.15	-5.14	-0.005	-1.59E-03	38.7	-17.0		194590
26	32.70	-135.86	-0.004	-1.57E-03	7.0	-0.0		0
27	32.60	-1.57	-0.004	0	0.1	0.0		0
28	32.40	-3.24	-0.004	0	-0.4	0.0		0
29	30.60	1.29	-0.004	0	-2.1	0.0		0
30	28.80	0.29	-0.003	0	-0.7	0.0		0
31	25.60	-0.00	-0.002	0	-0.2	0.0		0
32	22.80	-0.02	-0.001	0	-0.3	0.0		0
33	20.00	0.22	-0.000	0	-0.0	0.0		---

At elev. 46.10 Prop force = 33.8 kN/m run
At elev. 41.10 Prop force = 173.0 kN/m run
At elev. 36.10 Prop force = 73.7 kN/m run

		LEFT side						
		Effective stresses					Total	Adjusted
Node no.	Y coord	Water press.	Vertic -al	Active limit	Passive limit	Earth press.	earth press.	soil modulus
		kN/m2	kN/m2	kN/m2	kN/m2	kN/m2	kN/m2	kN/m2
1	46.10	0.00	0.00	0.00	0.00	0.00	0.00	0.0
2	45.50	0.00	0.00	0.00	0.00	0.00	0.00	0.0
3	44.75	0.00	0.00	0.00	0.00	0.00	0.00	0.0
4	44.00	0.00	0.00	0.00	0.00	0.00	0.00	0.0
5	43.50	0.00	0.00	0.00	0.00	0.00	0.00	0.0
6	43.00	0.00	0.00	0.00	0.00	0.00	0.00	0.0
7	42.50	0.00	0.00	0.00	0.00	0.00	0.00	0.0
8	41.70	0.00	0.00	0.00	0.00	0.00	0.00	0.0
9	41.10	0.00	0.00	0.00	0.00	0.00	0.00	0.0
10	40.55	0.00	0.00	0.00	0.00	0.00	0.00	0.0
11	40.00	0.00	0.00	0.00	0.00	0.00	0.00	0.0
12	39.20	0.00	0.00	0.00	0.00	0.00	0.00	0.0
13	39.00	0.00	0.00	0.00	0.00	0.00	0.00	0.0
14	38.60	0.00	0.00	0.00	0.00	0.00	0.00	0.0
15	38.00	0.00	0.00	0.00	0.00	0.00	0.00	0.0
16	37.53	0.00	0.00	0.00	0.00	0.00	0.00	0.0
17	37.05	0.00	0.00	0.00	0.00	0.00	0.00	0.0
18	36.58	0.00	0.00	0.00	0.00	0.00	0.00	0.0
19	36.10	0.00	0.00	0.00	0.00	0.00	0.00	0.0
		0.00	0.00	0.00	0.00	0.00	0.00	149998
20	35.40	0.00	14.00	2.00	175.94	8.90	8.90	149998
21	35.10	0.00	20.00	2.86	251.35	0.00	0.00A	149998
		0.00	20.00	0.00	187.26	74.09	74.09	49999
22	34.70	3.60	24.00	0.00	210.79	78.97	82.57	49999
		3.60	24.00	0.00	640.74	181.38	184.98	149998
23	34.15	8.55	30.06	0.00	691.48	138.04	146.59	149998
24	33.60	13.50	36.12	0.00	742.24	98.02	111.52	149998
25	33.15	17.55	41.08	0.00	783.81	56.51	74.06	149998
26	32.70	21.60	46.04	0.00	825.40	49.45	71.05	149998
27	32.60	22.50	47.15	0.00	834.65	58.77	81.27	149998
28	32.40	24.30	49.36	0.00	853.16	57.93	82.23	149998
29	30.60	40.50	69.28	0.00	1020.10	61.80	102.30	149998
30	28.80	45.00	101.02	0.00	1286.00	70.69	115.69	149998
31	25.60	50.00	160.80	0.00	1786.84	91.46	141.46	149998
32	22.80	78.00	189.93	0.00	2030.88	101.39	179.39	149998
33	20.00	106.00	219.51	0.00	2278.71	111.69	217.69	149998

(continued)

Stage No.17 Change EI of wall to 194590 kN.m2/m run
Allow wall to relax with new modulus value

		RIGHT side						
			Effective stresses				Total	Adjusted
Node no.	Y coord	Water press.	Vertic -al	Active limit	Passive limit	Earth press.	earth press.	soil modulus
		kN/m2	kN/m2	kN/m2	kN/m2	kN/m2	kN/m2	kN/m2
1	46.10	0.00	0.00	0.00	0.00	0.00	0.00	0.0
2	45.50	0.00	0.00	0.00	0.00	0.00	0.00	0.0
		0.00	0.00	0.00	26.45	26.45	26.45p	19999
3	44.75	0.00	17.66	0.00	93.78	23.73	23.73	19999
4	44.00	0.00	31.59	3.33	146.89	18.82	18.82	19999
5	43.50	0.00	40.72	6.16	181.68	16.16	16.16	19999
6	43.00	0.00	49.81	8.99	216.35	15.10	15.10	19999
7	42.50	0.00	58.89	11.81	250.97	16.80	16.80	19999
8	41.70	0.00	73.42	16.32	306.33	24.40	24.40	19999
9	41.10	0.00	84.30	19.70	347.84	30.66	30.66	19999
10	40.55	0.00	94.28	22.80	385.87	34.01	34.01	19999
11	40.00	0.00	104.25	25.89	423.88	35.76	35.76	19999
12	39.20	0.00	118.74	30.39	479.10	39.12	39.12	19999
		0.00	118.74	27.65	537.57	37.02	37.02	19999
13	39.00	0.00	122.35	28.69	553.08	36.31	36.31	19999
14	38.60	0.00	129.59	30.75	584.09	37.23	37.23	19999
15	38.00	6.00	134.42	32.13	604.83	36.62	42.62	19999
16	37.53	10.75	138.24	33.22	621.20	35.91	46.66	19999
17	37.05	15.50	142.05	34.30	637.54	32.84	48.34A	19999
18	36.58	20.25	145.85	35.38	653.84	36.67	56.92	19999
19	36.10	25.00	149.64	36.47	670.10	40.70	65.70	19999
20	35.40	32.00	155.22	38.05	694.00	45.49	77.49	19999
		32.00	155.22	24.52	982.18	17.95	49.95A	49997
21	35.10	35.00	157.90	25.14	997.96	19.07	54.07A	49997
22	34.70	39.00	161.48	25.95	1018.98	20.07	59.07A	49997
		39.00	161.48	0.00	1792.53	6.72	45.72	149992
23	34.15	44.50	166.94	0.00	1838.26	11.67	56.17	149992
24	33.60	45.00	177.39	0.00	1925.81	12.48	57.48	149992
25	33.15	45.00	186.34	0.00	2000.83	34.19	79.19	149992
26	32.70	45.00	195.29	0.00	2075.81	161.91	206.91	149992
27	32.60	45.00	197.28	0.00	2092.47	37.84	82.84	149992
28	32.40	45.00	201.25	0.00	2125.78	40.46	85.46	149992
29	30.60	45.00	237.01	0.00	2425.38	56.00	101.00	149992
30	28.80	45.00	272.74	0.91	2724.73	70.40	115.40	149992
31	25.60	50.00	331.24	11.56	3214.83	91.46	141.46	149992
32	22.80	78.00	358.81	16.58	3445.84	101.42	179.42	149992
33	20.00	106.00	386.42	21.60	3677.12	111.47	217.47	149992

Legend: 12.34 a Soil pressure at active limit
26.45 p Soil pressure at passive limit
59.07 A Arching - soil pressure below active limit

Units: kN,m

Stage No.17 Change EI of wall to 194590kN.m2/m run

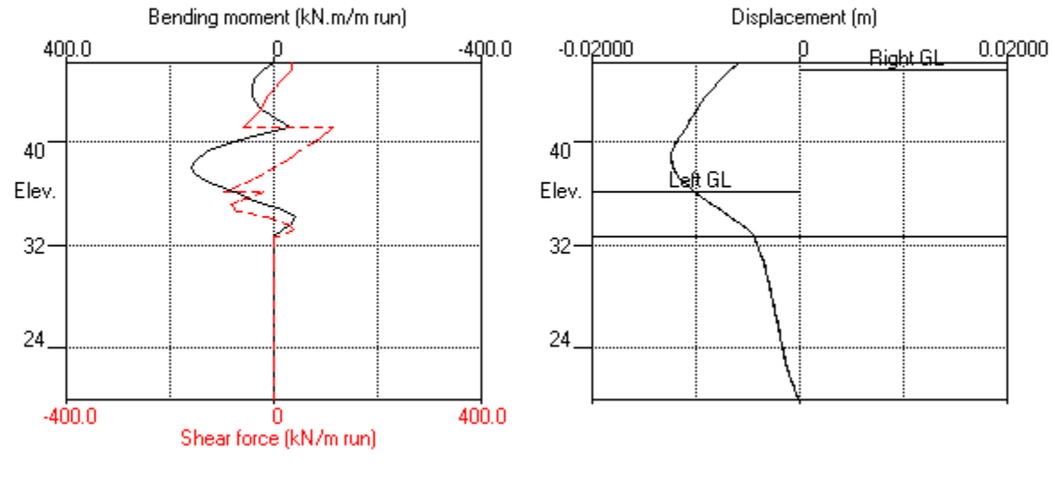

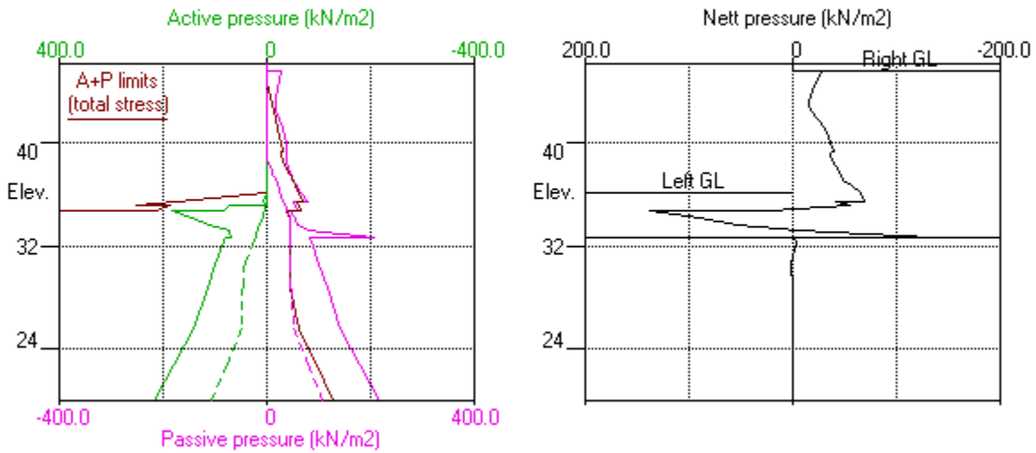

Units: kN,m

Summary of results

STABILITY ANALYSIS of Fully Embedded Wall according to Strength Factor method
Factor of safety on soil strength

Stage No.	Ground level Act.	Pass.	Prop Elev.	FoS for toe elev. = 32.70 Factor of Safety	Moment equilib. at elev.	Toe elev. for FoS = 1.500 Toe elev.	Wall Penetr -ation	Direction of failure
1	45.50	45.50	Cant.	Conditions not suitable for FoS calc.				
2	45.50	45.50	Cant.	Conditions not suitable for FoS calc.				
3	45.50	45.50	No analysis at this stage					
4	45.50	42.50	Cant.	2.640	33.62	38.95	3.55	R to L
5	45.50	42.50	43.00	Conditions not suitable for FoS calc.				
6	45.50	38.00	43.00	3.762	n/a	35.24	2.76	R to L
7	45.50	38.00	43.00	2.476	n/a	34.32	3.68	R to L
8	38.00	45.50	More than one prop. No FoS calc.					

All remaining stages have more than one prop - FoS calculation n/a

Minimum required Anchor Free Lengths
This additional information would be given here if the Wedge Analysis option had been selected.

TONKIN + TAYLOR LTD | Sheet No.
Program: WALLAP Version 6.09 Revision A61.B78.R61 | Job No.
Licensed from GEOSOLVE | Made by :
Data filename/Run ID: 20261027_UoA_Section2_Anc_DeflectionEnvelope
New data set - contains default parameters | Date:28-10-2026
Please modify / add | Checked :

Units: kN,m

Summary of results

BENDING MOMENT and DISPLACEMENT ANALYSIS of Fully Embedded Wall

Analysis options

2-D finite element model. Active limit arching modelled.
Soil deformations are elastic until the active or passive limit is reached
Open Tension Crack analysis - No

Length of wall perpendicular to section = 1000.00m
Rigid boundaries: Left side 40.00m from wall Rough
Right side 40.00m from wall Rough
Lower boundary at elevation 20.00m Rough
Soil-wall interface Smooth

Bending moment, shear force and displacement envelopes

Node no.	Y coord	Displacement maximum	Displacement minimum	Bending moment maximum	Bending moment minimum	Shear force maximum	Shear force minimum
	m	m	kN.m/m	kN.m/m	kN/m	kN/m	
1	46.10	0.000	-0.013	0.0	-0.0	38.3	0.0
2	45.50	0.000	-0.012	23.0	-0.0	38.3	0.0
3	44.75	0.000	-0.011	43.5	-8.3	19.5	-19.2
4	44.00	0.000	-0.011	50.7	-30.3	3.3	-37.1
5	43.50	0.000	-0.011	49.8	-51.9	0.5	-48.3
6	43.00	0.000	-0.012	44.8	-78.9	107.1	-58.9
7	42.50	0.000	-0.012	36.1	-40.5	101.1	-25.5
8	41.70	0.000	-0.013	66.2	-16.9	89.8	-42.0
9	41.10	0.000	-0.013	116.6	-31.4	120.4	-58.5
10	40.55	0.000	-0.014	155.3	-15.5	102.9	0.0
11	40.00	0.000	-0.014	184.7	-12.7	83.7	-2.1
12	39.20	0.000	-0.014	206.5	-8.1	53.0	-39.8
13	39.00	0.000	-0.014	207.6	-7.0	96.3	-51.6
14	38.60	0.000	-0.013	203.8	-5.2	79.0	-19.6
15	38.00	0.000	-0.013	203.1	-3.6	51.5	-53.6
16	37.53	0.000	-0.012	195.0	-3.7	27.9	-65.1
17	37.05	0.000	-0.012	176.7	-5.4	3.6	-71.5
18	36.58	0.000	-0.011	168.5	-9.1	0.0	-76.9
19	36.10	0.000	-0.010	151.0	-15.1	0.0	-103.9
20	35.40	0.000	-0.009	97.7	-28.9	0.0	-103.3
21	35.10	0.000	-0.009	64.8	-40.9	0.0	-118.3
22	34.70	0.000	-0.008	19.0	-69.4	0.0	-110.0
23	34.15	0.000	-0.007	0.0	-81.2	14.2	-40.3
24	33.60	0.000	-0.006	0.0	-59.4	57.2	0.0
25	33.15	0.000	-0.005	0.0	-27.1	65.5	0.0
26	32.70	0.000	-0.005	0.0	-0.0	10.9	0.0
27	32.60	0.000	-0.005	0.0	0.0	0.1	-0.0
28	32.40	0.000	-0.005	0.0	0.0	0.0	-0.4
29	30.60	0.000	-0.004	0.0	0.0	0.0	-2.1
30	28.80	0.000	-0.003	0.0	0.0	0.0	-0.7
31	25.60	0.000	-0.002	0.0	0.0	0.0	-0.2
32	22.80	0.000	-0.001	0.0	0.0	0.0	-0.3
33	20.00	0.000	-0.000	0.0	0.0	0.0	-0.0

Summary of results (continued)

Maximum and minimum bending moment and shear force at each stage

Stage no.	Bending moment maximum kN.m/m	elev.	minimum kN.m/m	elev.	Shear force maximum kN/m	elev.	minimum kN/m	elev.
1	1.5	37.53	-0.4	34.15	0.4	33.15	-1.0	35.40
2	2.6	39.00	-3.1	34.15	2.4	33.15	-2.7	35.40
3	No calculation at this stage							
4	0.0	32.70	-41.8	34.70	29.2	33.15	-23.6	35.40
5	47.0	38.60	-70.3	43.00	68.2	43.00	-57.1	43.00
6	113.1	39.20	-62.9	43.00	88.9	43.00	-56.8	35.40
7	207.6	39.00	-81.2	34.15	107.1	43.00	-94.4	35.40
8	127.5	38.00	-63.6	43.00	93.8	43.00	-76.5	35.40
9	106.8	37.53	-65.6	43.00	88.4	43.00	-62.6	35.40
10	172.8	37.05	-71.4	43.00	96.3	39.00	-117.7	35.10
11	172.1	37.05	-70.9	43.00	95.6	39.00	-118.3	35.10
12	No calculation at this stage							
13	No calculation at this stage							
14	203.1	38.00	-78.9	43.00	107.4	41.10	-103.9	36.10
15	No calculation at this stage							
16	188.1	38.00	-34.9	34.15	120.4	41.10	-102.5	35.10
17	158.2	38.00	-39.9	34.15	114.5	41.10	-96.3	36.10

Maximum and minimum displacement at each stage

Stage no.	Displacement maximum m	elev.	minimum m	elev.	Stage description
1	0.000	46.10	-0.000	39.00	Apply surcharge no.1 at elev. 45.50
2	0.000	46.10	-0.001	46.10	Apply surcharge no.3 at elev. 45.50
3	Wall displacements reset to zero Change EI of wall to 291880kN.m2/m run				
4	0.000	46.10	-0.013	46.10	Excav. to elev. 42.50 on LEFT side
5	0.000	46.10	-0.003	39.00	Install prop no.1 at elev. 43.00
6	0.000	46.10	-0.008	40.00	Excav. to elev. 38.00 on LEFT side
7	0.000	46.10	-0.014	40.00	Apply water pressure profile no.2
8	0.000	46.10	-0.010	40.00	Install prop no.2 at elev. 39.00
9	0.000	46.10	-0.009	39.20	Apply water pressure profile no.1
10	0.000	46.10	-0.011	38.60	Excav. to elev. 35.10 on LEFT side
11	0.000	46.10	-0.011	38.60	Fill to elev. 36.10 on LEFT side
12	No calculation at this stage				Install prop no.4 at elev. 36.10
13	No calculation at this stage				Install prop no.3 at elev. 41.10
14	0.000	46.10	-0.012	38.60	Remove prop no.2 at elev. 39.00
15	No calculation at this stage				Install prop no.5 at elev. 46.10
16	0.000	46.10	-0.012	38.60	Remove prop no.1 at elev. 43.00
17	0.000	46.10	-0.012	38.60	Change EI of wall to 194590kN.m2/m run

Run ID. 20261027_UoA_Section2_Anc_DeflectionEnvelope | Sheet No.
New data set - contains default parameters | Date:28-10-2026
Please modify / add | Checked :

Summary of results (continued)

Prop forces at each stage (horizontal components)

Stage no.	Anchor no. 1 at elev. 43.00 kN/m run	kN/prop	Anchor no. 2 at elev. 39.00 kN/m run	kN/prop	Strut no. 3 at elev. 41.10 kN/m run	kN/prop
5	125.22	601.04	---	---	---	---
6	136.84	656.83	---	---	---	---
7	149.63	718.22	---	---	---	---
8	141.07	677.12	125.22	601.04	---	---
9	138.25	663.61	120.95	580.58	---	---
10	142.34	683.24	131.83	632.77	---	---
11	142.09	682.02	131.14	629.46	---	---
14	141.34	678.44	---	---	70.60	70.60
16	---	---	---	---	173.43	173.43
17	---	---	---	---	172.96	172.96

Stage no.	Strut no. 4 at elev. 36.10 kN/m run	kN/prop	Strut no. 5 at elev. 46.10 kN/m run	kN/prop
14	63.23	63.23	---	---
16	56.47	56.47	38.35	38.35
17	73.71	73.71	33.84	33.84

TONKIN + TAYLOR LTD | Sheet No.
Program: WALLAP Version 6.09 Revision A61.B78.R61 | Job No.
Licensed from GEOSOLVE | Made by :
Data filename/Run ID: 20261027_UoA_Section2_Anc_DeflectionEnvelope
New data set - contains default parameters | Date:28-10-2026
Please modify / add | Checked :

Units: kN,m

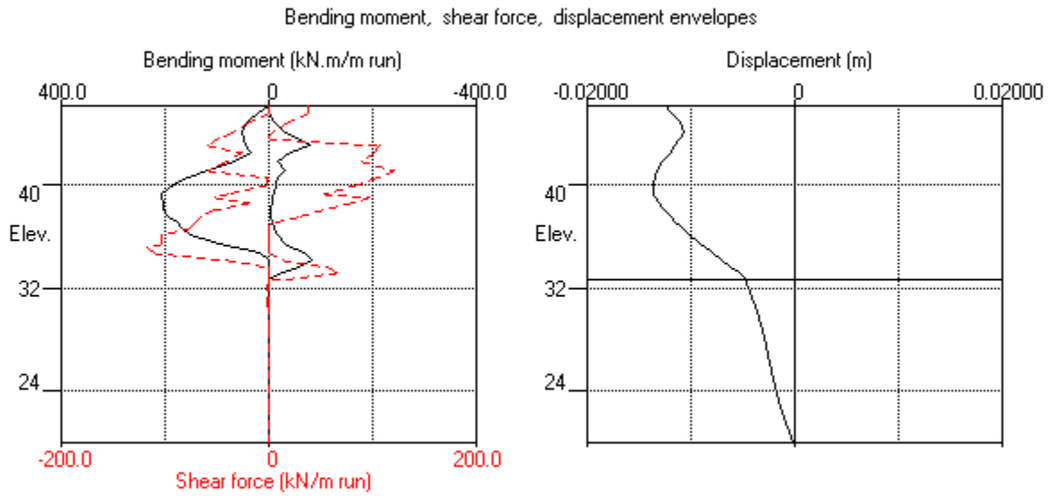

TONKIN + TAYLOR LTD | Sheet No.
Program: WALLAP Version 6.09 Revision A61.B78.R61 | Job No.
Licensed from GEOSOLVE | Made by :
Data filename/Run ID: 20261027_UoA_Section2_Prop_DeflectionEnvelope
New data set - contains default parameters | Date:28-10-2026
Please modify / add | Checked :

Units: kN,m

INPUT DATA

SOIL PROFILE

Stratum no.	Elevation of top of stratum	Soil types Left side	Right side
1	45.50	6 AVF	6 AVF
2	39.20	2 Residal ECBF	2 Residal ECBF
3	35.40	3 HW ECBF	3 HW ECBF
4	34.70	4 MW-SW ECBF (N>50)	4 MW-SW ECBF (N>50)

SOIL PROPERTIES

No.	Soil type Description	Bulk density kN/m3	Young's Modulus Eh,kN/m2	At rest coeff. Ko	Consol state.	Active limit Ka	Passive limit Kp	Cohesion kN/m2
	(Datum elev.)		(dEh/dy)	(dKo/dy)	(Nu)	(Kac)	(Kpc)	(dc/dy)
1	Fill	17.00	10000	0.530	OC	0.311	3.812	2.000d
				(0.300)		(1.297)	(5.289)	
2	Residal ECBF	18.00	20000	0.500	OC	0.285	4.288	5.000d
				(0.300)		(1.238)	(5.694)	
3	HW ECBF	19.00	50000	0.430	OC	0.229	5.879	10.00d
				(0.250)		(1.101)	(6.968)	
4	MW-SW ECBF (N>50)	20.00	150000	0.360	OC	0.182	8.378	50.00d
				(0.250)		(0.975)	(8.793)	
5	Structural fill	20.00	150000	0.290	OC	0.143	12.57	0.0d
				(0.200)		(0.857)	(11.567)	
6	AVF	18.00	20000	0.530	OC	0.311	3.812	5.000d
				(0.300)		(1.297)	(5.289)	

Additional soil parameters associated with Ka and Kp

No.	Soil type Description	--- parameters for Ka --- Soil friction angle	Wall adhesion coeff.	Back-fill angle	--- parameters for Kp --- Soil friction angle	Wall adhesion coeff.	Back-fill angle
1	Fill	28.00	0.639	0.00	28.00	0.469	0.00
2	Residal ECBF	30.00	0.634	0.00	30.00	0.464	0.00
3	HW ECBF	35.00	0.619	0.00	35.00	0.450	0.00
4	MW-SW ECBF (N>50)	40.00	0.602	0.00	40.00	0.434	0.00
5	Structural fill	45.00	0.581	0.00	45.00	0.414	0.00
6	AVF	28.00	0.639	0.00	28.00	0.469	0.00

GROUND WATER CONDITIONS

Density of water = 10.00 kN/m3
Initial water pressure profile = Profile number 5

Automatic water pressure balancing at toe of wall : No

Water press. profile no.	Left side Point no.	Elev. m	Piezo elev. m	Water press. kN/m2	Right side Point no.	Elev. m	Piezo elev. m	Water press. kN/m2
1	1	35.10	35.10	0.0	1	41.70	41.70	0.0
	2	30.10	34.60	45.0	2	37.20	41.70	45.0
	3	26.10	30.60	45.0	3	26.00	30.50	45.0
2	1	35.10	35.10	0.0	1	38.60	38.60	0.0
	2	30.10	34.60	45.0	2	34.10	38.60	45.0
	3	26.10	30.60	45.0	3	26.10	30.60	45.0
3	Not defined							
4	Not defined							
5	1	41.70	41.70	0.0	1	41.70	41.70	0.0
	2	37.20	41.70	45.0	2	37.20	41.70	45.0
	3	26.00	30.50	45.0	3	26.00	30.50	45.0

WALL PROPERTIES

Type of structure = Fully Embedded Wall
Elevation of toe of wall = 32.70
Maximum finite element length = 0.80 m
Youngs modulus of wall E = 2.9000E+07 kN/m2
Moment of inertia of wall I = 0.013420 m4/m run
E.I = 389180 kN.m2/m run
Yield Moment of wall = Not defined

STRUTS and ANCHORS

Prop no.	Elev.	Prop spacing m	Cross-section area sq.m	Youngs modulus kN/m2	Free length m	Inclination (degs)	Pre-stress /prop kN	Strut or Anchor	Allow tension ?	L/R
1	43.00	4.80	0.020100	2.000E+08	18.50	-25.00	0	Strut	No	L
2	39.00	4.80	0.020100	2.000E+08	10.00	-25.00	0	Strut	No	L
3	41.10	1.00	0.150000	3.000E+07	20.00	0.00	0	Strut	No	L
4	36.10	1.00	0.150000	3.000E+07	20.00	0.00	0	Strut	No	L
5	46.10	1.00	0.150000	3.000E+07	20.00	0.00	0	Strut	No	L

SURCHARGE LOADS

Surcharge no.	Elev.	Distance from wall	Length parallel to wall	Width perpend. to wall	Surcharge(kN/m2) Near edge	Far edge	Soil type	Part fact.	Short Q reduc. fact.
1	45.50	-7.00(R)	20.00	15.00	12.00	=	-- --	--	--
2	45.50	-0.10(R)	20.00	6.90	5.00	=	-- --	--	--

Note: L = Left side, R = Right side

CONSTRUCTION STAGES

Construction stage no.	Stage description
1	Apply surcharge no.1 at elevation 45.50
2	Apply surcharge no.2 at elevation 45.50
3	Change EI of wall to 291880 kN.m2/m run Reset wall displacements to zero at this stage
4	Apply water pressure profile no.1 No analysis at this stage
5	Excavate to elevation 42.50 on LEFT side Toe of berm at elevation 35.10 Width of top of berm = 1.00 Width of toe of berm = 15.80
6	Install strut or anchor no.1 at elevation 43.00
7	Excavate to elevation 38.50 on LEFT side Toe of berm at elevation 35.10 Width of top of berm = 1.00 Width of toe of berm = 7.80
8	Install strut or anchor no.2 at elevation 39.00
9	Excavate to elevation 35.10 on LEFT side
10	Fill to elevation 36.10 on LEFT side with soil type 5
11	Apply water pressure profile no.2 No analysis at this stage
12	Install strut or anchor no.4 at elevation 36.10
13	Install strut or anchor no.3 at elevation 41.10
14	Remove strut or anchor no.2 at elevation 39.00
15	Install strut or anchor no.5 at elevation 46.10
16	Remove strut or anchor no.1 at elevation 43.00
17	Change EI of wall to 194590 kN.m2/m run Allow wall to relax with new modulus value

FACTORS OF SAFETY and ANALYSIS OPTIONS

Stability analysis:
 Method of analysis - Strength Factor method
 Factor on soil strength for calculating wall depth = 1.50

Parameters for undrained strata:
 Minimum equivalent fluid density = 5.00 kN/m3
 Maximum depth of water filled tension crack = 0.00 m

Bending moment and displacement calculation:
 Method - 2-D finite element model
 Open Tension Crack analysis? - No
 Active limit arching modelled? - Yes
 Non-linear Modulus Parameter (L) = 12.80 m

Boundary conditions:
 Length of wall (normal to plane of analysis) = 1000.00 m

 Width of excavation/fill on Left side of wall = 40.00 m
 Width of excavation/fill on Right side of wall = 40.00 m

 Distance to rigid boundary on Left side = 40.00 m
 Distance to rigid boundary on Right side = 40.00 m

Elevation of rigid lower boundary = 20.00

Lower rigid boundary at elevation 20.00 - Rough
Rigid boundary on Left side - Rough
Rigid boundary on Right side - Rough
Soil-wall interface - Smooth

OUTPUT OPTIONS

Stage no.	Stage description	Displacement Bending mom. Shear force	Active, Passive pressures	Graph. output
1	Apply surcharge no.1 at elev. 45.50	Yes	Yes	Yes
2	Apply surcharge no.2 at elev. 45.50	No	No	No
3	Change EI of wall to 291880kN.m2/m run	No	No	No
4	Apply water pressure profile no.1	No	No	No
5	Excav. to elev. 42.50 on LEFT side	Yes	Yes	Yes
6	Install prop no.1 at elev. 43.00	Yes	Yes	Yes
7	Excav. to elev. 38.50 on LEFT side	Yes	Yes	Yes
8	Install prop no.2 at elev. 39.00	Yes	Yes	Yes
9	Excav. to elev. 35.10 on LEFT side	Yes	Yes	Yes
10	Fill to elev. 36.10 on LEFT side	No	No	No
11	Apply water pressure profile no.2	No	No	No
12	Install prop no.4 at elev. 36.10	Yes	Yes	Yes
13	Install prop no.3 at elev. 41.10	Yes	Yes	Yes
14	Remove prop no.2 at elev. 39.00	Yes	Yes	Yes
15	Install prop no.5 at elev. 46.10	Yes	Yes	Yes
16	Remove prop no.1 at elev. 43.00	Yes	Yes	Yes
17	Change EI of wall to 194590kN.m2/m run	No	No	No
*	Summary output	Yes	-	Yes

Program WALLAP - Copyright (C) 2026 by DL Borin, distributed by GEOSOLVE
150 St. Alphonsus Road, London SW4 7BW, UK www.geosolve.co.uk

Units: kN,m

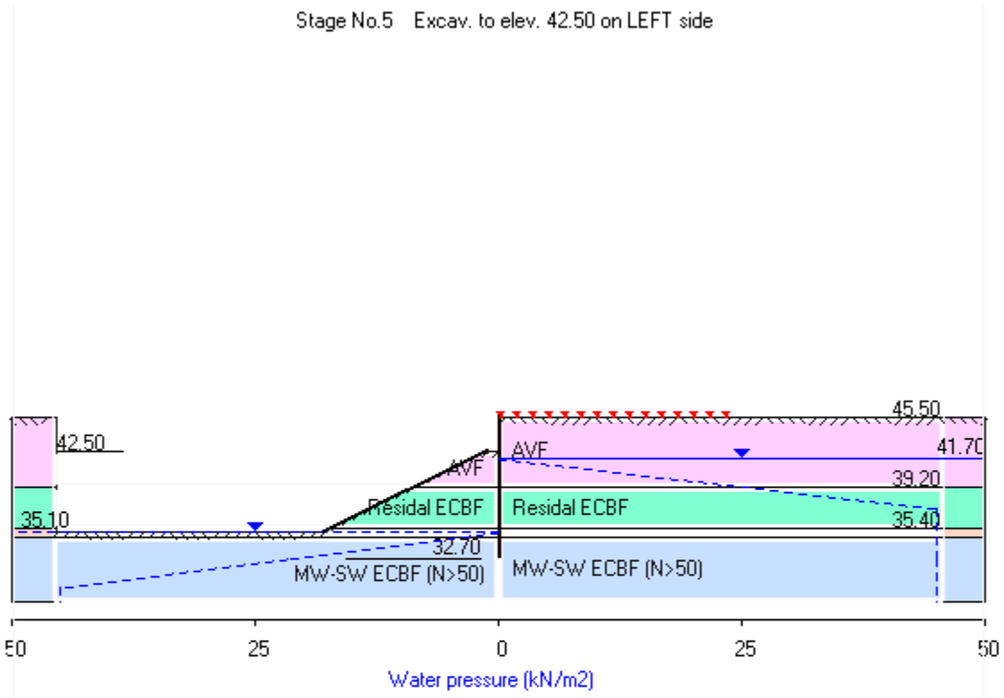

TONKIN + TAYLOR LTD | Sheet No.
Program: WALLAP Version 6.09 Revision A61.B78.R61 | Job No.
Licensed from GEOSOLVE | Made by :
Data filename/Run ID: 20261027_UoA_Section2_Prop_DeflectionEnvelope
New data set - contains default parameters | Date:28-10-2026
Please modify / add | Checked :

Units: kN,m

Stage No. 5 Excavate to elevation 42.50 on LEFT side
Toe of berm at elevation 35.10
Width of top of berm = 1.00
Width of toe of berm = 15.80

STABILITY ANALYSIS of Fully Embedded Wall according to Strength Factor method
Factor of safety on soil strength

Stage No.	Ground level Act.	Pass.	Prop Elev.	FoS for toe elev. = 32.70 Factor of Safety	Moment equilib. at elev.	Toe elev. for FoS = 1.500 Toe elev.	Wall Penetr -ation	Direction of failure
5	45.50	42.50	Cant.	1.622	33.59	33.49	9.01	R to L

BENDING MOMENT and DISPLACEMENT ANALYSIS of Fully Embedded Wall
Analysis options
2-D finite element model. Active limit arching modelled.
Soil deformations are elastic until the active or passive limit is reached
Open Tension Crack analysis - No

Length of wall perpendicular to section = 1000.00m
Rigid boundaries: Left side 40.00m from wall Rough
Right side 40.00m from wall Rough
Lower boundary at elevation 20.00m Rough
Soil-wall interface Smooth

*** Wall displacements reset to zero at stage 3

Node no.	Y coord	Nett pressure kN/m2	Wall disp. m	Wall rotation rad.	Shear force kN/m	Bending moment kN.m/m	Prop forces kN/m	EI of wall kN.m2/m
1	46.10	0.00	-0.016	-1.07E-03	0.0	0.0		291880
2	45.50	0.00	-0.015	-1.07E-03	0.0	0.0		291880
3	44.75	0.00	-0.014	-1.07E-03	-0.0	-0.8		291880
4	44.00	-3.33	-0.013	-1.06E-03	-1.2	-1.5		291880
5	43.50	-6.16	-0.013	-1.06E-03	-3.6	-2.8		291880
6	43.00	-8.99	-0.012	-1.05E-03	-7.4	-5.6		291880
7	42.50	-11.81	-0.012	-1.04E-03	-12.6	-10.6		291880
		4.62	-0.012	-1.04E-03	-12.6	-10.6		
8	41.70	19.68	-0.011	-9.95E-04	-2.9	-19.2		291880
9	41.10	13.34	-0.010	-9.54E-04	7.0	-17.6		291880
10	40.55	8.29	-0.010	-9.22E-04	13.0	-11.9		291880
11	40.00	3.51	-0.009	-9.03E-04	16.2	-3.6		291880
12	39.20	-2.20	-0.009	-9.05E-04	16.7	10.0		291880
13	39.00	-4.34	-0.008	-9.11E-04	16.1	13.3		291880
14	38.60	-7.13	-0.008	-9.30E-04	13.8	19.3		291880
15	38.50	-8.47	-0.008	-9.36E-04	13.0	20.6		291880
16	38.05	-11.89	-0.008	-9.67E-04	8.4	25.5		291880
17	37.60	-16.19	-0.007	-1.00E-03	2.1	28.1		291880
18	36.85	-20.85	-0.006	-1.06E-03	-11.8	24.9		291880
19	36.10	-23.83	-0.006	-1.11E-03	-28.5	10.2		291880
20	35.40	-23.54	-0.005	-1.10E-03	-45.1	-15.6		291880
		19.21	-0.005	-1.10E-03	-45.1	-15.6		
21	35.10	11.86	-0.004	-1.08E-03	-40.5	-28.3		291880
22	34.70	6.34	-0.004	-1.04E-03	-36.8	-43.5		291880
		90.08	-0.004	-1.04E-03	-36.8	-43.5		
23	34.15	69.18	-0.003	-9.58E-04	7.0	-49.9		291880
24	33.60	30.49	-0.003	-8.83E-04	34.4	-35.5		291880

(continued)

Stage No.5 Excavate to elevation 42.50 on LEFT side
Toe of berm at elevation 35.10
Width of top of berm = 1.00
Width of toe of berm = 15.80

Node no.	Y coord	Nett pressure	Wall disp.	Wall rotation	Shear force	Bending moment	Prop forces	EI of wall
		kN/m2	m	rad.	kN/m	kN.m/m	kN/m	kN.m2/m
25	33.15	-9.19	-0.003	-8.45E-04	39.2	-16.8		291880
26	32.70	-135.02	-0.002	-8.33E-04	6.7	0.0		0
27	32.60	-0.20	-0.002	0	-0.0	0.0		0
28	32.40	-3.24	-0.002	0	-0.4	0.0		0
29	30.60	1.30	-0.002	0	-2.1	0.0		0
30	28.80	0.16	-0.001	0	-0.8	0.0		0
31	25.60	0.13	-0.001	0	-0.4	0.0		0
32	22.80	-0.01	-0.001	0	-0.2	0.0		0
33	20.00	0.13	-0.000	0	-0.0	0.0		---

LEFT side

Node no.	Y coord	Water press.	Effective stresses Vertic -al	Active limit	Passive limit	Earth press.	Total earth press.	Adjusted soil modulus
		kN/m2	kN/m2	kN/m2	kN/m2	kN/m2	kN/m2	kN/m2
1	46.10	0.00	0.00	0.00	0.00	0.00	0.00	0.0
2	45.50	0.00	0.00	0.00	0.00	0.00	0.00	0.0
3	44.75	0.00	0.00	0.00	0.00	0.00	0.00	0.0
4	44.00	0.00	0.00	0.00	0.00	0.00	0.00	0.0
5	43.50	0.00	0.00	0.00	0.00	0.00	0.00	0.0
6	43.00	0.00	0.00	0.00	0.00	0.00	0.00	0.0
7	42.50	0.00	0.00	0.00	0.00	0.00	0.00	0.0
		0.00	0.00	0.00	16.43b	16.43	16.43p	19999
8	41.70	0.00	14.40	0.00	42.77b	37.48	37.48	19999
9	41.10	0.00	25.20	1.34	46.88b	40.86	40.86	19999
10	40.55	0.00	35.10	4.42	57.07b	44.41	44.41	19999
11	40.00	0.00	45.01	7.49	67.07b	48.12	48.12	19999
12	39.20	0.00	59.41	11.97	84.23b	54.24	54.24	19999
		0.00	59.41	10.74	145.38b	51.59	51.59	19999
13	39.00	0.00	63.02	11.77	112.78b	52.65	52.65	19999
14	38.60	0.00	70.22	13.83	101.93b	55.67	55.67	19999
15	38.50	0.00	72.02	14.34	103.05b	56.06	56.06	19999
16	38.05	0.00	80.13	16.65	112.91b	59.31	59.31	19999
17	37.60	0.00	88.24	18.96	121.92b	62.10	62.10	19999
18	36.85	0.00	101.76	22.82	137.87b	67.30	67.30	19999
19	36.10	0.00	115.29	26.67	153.50b	72.48	72.48	19999
20	35.40	0.00	127.92	30.27	168.60b	78.75	78.75	19999
		0.00	127.92	18.27	821.72	91.25	91.25	49999
21	35.10	0.00	133.64	19.58	528.61	89.68	89.68	49999
22	34.70	3.60	137.66	20.50	291.43b	87.59	91.19	49999
		3.60	137.66	0.00	1593.00	131.48	135.08	149996
23	34.15	8.55	143.75	0.00	1456.71	109.69	118.24	149996
24	33.60	13.50	149.84	0.00	1074.57b	90.91	104.41	149996
25	33.15	17.55	154.82	0.00	818.73b	71.54	89.09	149996
26	32.70	21.60	159.81	0.00	852.16b	9.11	30.71	149996
27	32.60	22.50	160.92	0.00	872.32b	76.61	99.11	149996
28	32.40	24.30	163.14	0.00	924.69b	75.25	99.55	149996
29	30.60	40.50	183.14	0.00	1086.23b	79.56	120.06	149996
30	28.80	45.00	214.91	0.00	1408.00b	88.81	133.81	149996
31	25.60	50.00	274.52	1.23	1818.18b	109.66	159.66	149996
32	22.80	78.00	303.21	6.45	2053.54b	119.69	197.69	149996
33	20.00	106.00	332.03	11.70	2260.41b	129.92	235.92	149996

(continued)

Stage No.5 Excavate to elevation 42.50 on LEFT side
Toe of berm at elevation 35.10
Width of top of berm = 1.00
Width of toe of berm = 15.80

RIGHT side

Node no.	Y coord	Effective stresses: Water press.	Vertic -al	Active limit	Passive limit	Earth press.	Total earth press.	Adjusted soil modulus
		kN/m2	kN/m2	kN/m2	kN/m2	kN/m2	kN/m2	kN/m2
1	46.10	0.00	0.00	0.00	0.00	0.00	0.00	0.0
2	45.50	0.00	0.00	0.00	0.00	0.00	0.00	0.0
		0.00	0.00	0.00	26.45	0.00	0.00a	19999
3	44.75	0.00	17.66	0.00	93.78	0.00	0.00a	19999
4	44.00	0.00	31.59	3.33	146.89	3.33	3.33a	19999
5	43.50	0.00	40.72	6.16	181.68	6.16	6.16a	19999
6	43.00	0.00	49.81	8.99	216.35	8.99	8.99a	19999
7	42.50	0.00	58.89	11.81	250.97	11.81	11.81a	19999
8	41.70	0.00	73.42	16.32	306.33	17.80	17.80	19999
9	41.10	6.00	78.30	17.83	324.96	21.52	27.52	19999
10	40.55	11.50	82.78	19.22	342.03	24.62	36.12	19999
11	40.00	17.00	87.25	20.61	359.07	27.60	44.60	19999
12	39.20	25.00	93.74	22.63	383.79	31.44	56.44	19999
		25.00	93.74	20.53	430.38	28.79	53.79	19999
13	39.00	27.00	95.35	20.99	437.32	29.99	56.99	19999
14	38.60	31.00	98.59	21.91	451.18	31.80	62.80	19999
15	38.50	32.00	99.39	22.14	454.64	32.53	64.53	19999
16	38.05	36.50	103.02	23.18	470.19	34.70	71.20	19999
17	37.60	41.00	106.64	24.21	485.70	37.29	78.29	19999
18	36.85	45.00	116.15	26.92	526.49	43.15	88.15	19999
19	36.10	45.00	129.64	30.76	584.34	51.31	96.31	19999
20	35.40	45.00	142.22	34.35	638.26	57.29	102.29	19999
		45.00	142.22	21.54	905.76	27.04	72.04	49997
21	35.10	45.00	147.90	22.85	939.18	32.82	77.82	49997
22	34.70	45.00	155.48	24.58	983.71	39.86	84.86	49997
		45.00	155.48	0.00	1742.26	0.00	45.00a	149992
23	34.15	45.00	166.44	0.00	1834.07	4.06	49.06	149992
24	33.60	45.00	177.39	0.00	1925.81	28.92	73.92	149992
25	33.15	45.00	186.34	0.00	2000.83	53.27	98.27	149992
26	32.70	45.00	195.29	0.00	2075.81	120.73	165.73	149992
27	32.60	45.00	197.28	0.00	2092.47	54.31	99.31	149992
28	32.40	45.00	201.25	0.00	2125.78	57.80	102.80	149992
29	30.60	45.00	237.01	0.00	2425.38	73.76	118.76	149992
30	28.80	45.00	272.74	0.91	2724.73	88.65	133.65	149992
31	25.60	49.00	332.24	11.74	3223.21	110.53	159.53	149992
32	22.80	77.00	359.81	16.76	3454.22	120.69	197.69	149992
33	20.00	105.00	387.42	21.78	3685.50	130.78	235.78	149992

Legend: 45.00 a Soil pressure at active limit
16.43 p Soil pressure at passive limit
2260.41 b Passive limit reduced because of berm

TONKIN + TAYLOR LTD | Sheet No.
Program: WALLAP Version 6.09 Revision A61.B78.R61 | Job No.
Licensed from GEOSOLVE | Made by :
Data filename/Run ID: 20261027_UoA_Section2_Prop_DeflectionEnvelope
New data set - contains default parameters | Date:28-10-2026
Please modify / add | Checked :

Units: kN,m

Stage No.5 Excav. to elev. 42.50 on LEFT side

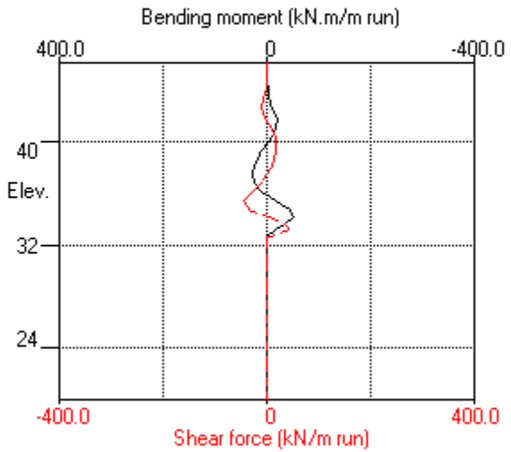

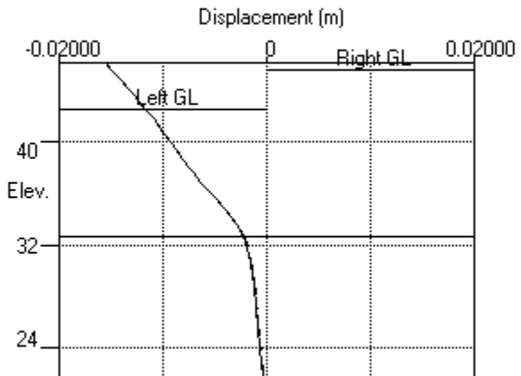

Stage No.5 Excav. to elev. 42.50 on LEFT side

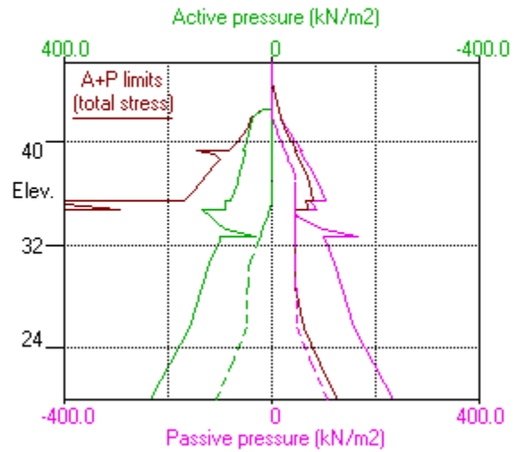

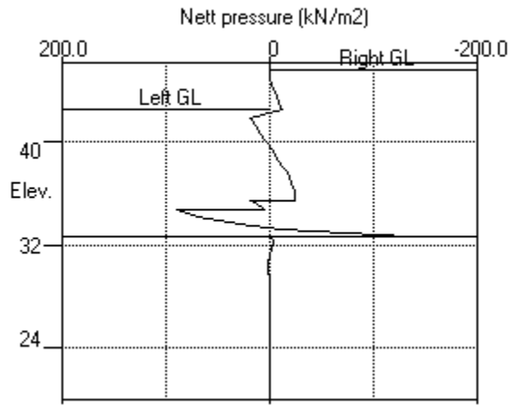

Units: kN,m

Stage No.7 Excav. to elev. 38.50 on LEFT side

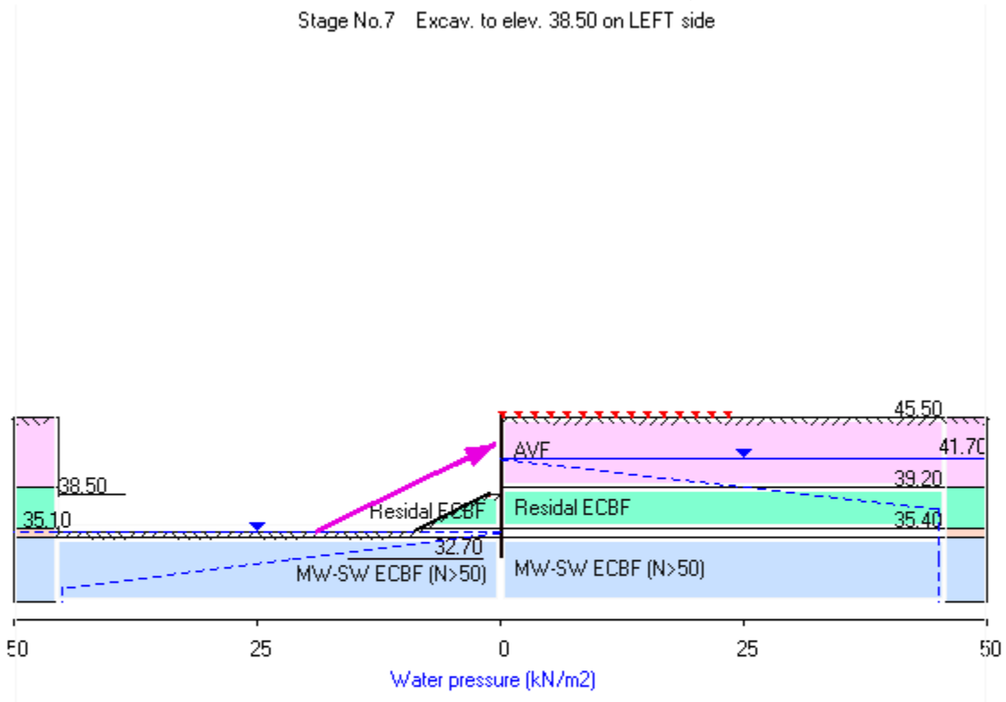

TONKIN + TAYLOR LTD | Sheet No.
Program: WALLAP Version 6.09 Revision A61.B78.R61 | Job No.
Licensed from GEOSOLVE | Made by :
Data filename/Run ID: 20261027_UoA_Section2_Prop_DeflectionEnvelope
New data set - contains default parameters | Date:28-10-2026
Please modify / add | Checked :

Units: kN,m

Stage No. 7 Excavate to elevation 38.50 on LEFT side
Toe of berm at elevation 35.10
Width of top of berm = 1.00
Width of toe of berm = 7.80

STABILITY ANALYSIS of Fully Embedded Wall according to Strength Factor method
Factor of safety on soil strength

Stage No.	Ground level Act.	Pass.	Prop Elev.	FoS for toe elev. = 32.70 Factor of Safety	Moment equilib. at elev.	Toe elev. for FoS = 1.500 Toe elev.	Wall Penetr -ation	Direction of failure
7	45.50	38.50	43.00	2.546	n/a	34.39	4.11	R to L

BENDING MOMENT and DISPLACEMENT ANALYSIS of Fully Embedded Wall
Analysis options
2-D finite element model. Active limit arching modelled.
Soil deformations are elastic until the active or passive limit is reached
Open Tension Crack analysis - No

Length of wall perpendicular to section = 1000.00m
Rigid boundaries: Left side 40.00m from wall Rough
Right side 40.00m from wall Rough
Lower boundary at elevation 20.00m Rough
Soil-wall interface Smooth

*** Wall displacements reset to zero at stage 3

Node no.	Y coord	Nett pressure	Wall disp.	Wall rotation	Shear force	Bending moment	Prop forces	EI of wall
		kN/m2	m	rad.	kN/m	kN.m/m	kN/m	kN.m2/m
1	46.10	0.00	-0.014	2.62E-04	0.0	0.0		291880
2	45.50	0.00	-0.015	2.62E-04	0.0	0.0		291880
		-16.82	-0.015	2.62E-04	0.0	-0.0		
3	44.75	-12.39	-0.015	2.69E-04	-11.0	-5.6		291880
4	44.00	-10.90	-0.015	3.00E-04	-19.7	-18.0		291880
5	43.50	-9.85	-0.015	3.41E-04	-24.9	-29.4		291880
6	43.00	-9.16	-0.015	4.05E-04	-29.6	-43.2	112.7	291880
		-9.16	-0.015	4.05E-04	83.1	-43.2		
7	42.50	-7.05	-0.016	4.47E-04	79.0	-3.0		291880
8	41.70	-7.68	-0.016	3.79E-04	73.1	55.7		291880
9	41.10	-12.48	-0.016	2.25E-04	67.1	97.7		291880
10	40.55	-17.57	-0.016	1.23E-05	58.8	132.4		291880
11	40.00	-37.61	-0.016	-2.60E-04	43.6	161.7		291880
12	39.20	-47.63	-0.016	-7.26E-04	9.5	183.5		291880
		-45.53	-0.016	-7.26E-04	9.5	183.5		

13	39.00	-47.99	-0.016	-8.50E-04	0.2	184.4	291880
14	38.60	-52.91	-0.015	-1.09E-03	-20.0	180.5	291880
15	38.50	-54.14	-0.015	-1.15E-03	-25.4	178.3	291880
		-31.67	-0.015	-1.15E-03	-25.4	178.3	
16	38.05	-21.23	-0.014	-1.41E-03	-37.3	163.7	291880
17	37.60	-26.89	-0.014	-1.65E-03	-48.1	144.7	291880
18	36.85	-16.78	-0.012	-1.96E-03	-64.5	100.8	291880
19	36.10	-19.81	-0.011	-2.15E-03	-78.2	47.8	291880
20	35.40	-21.92	-0.009	-2.19E-03	-92.8	-11.8	291880
		61.65	-0.009	-2.19E-03	-92.8	-11.8	
21	35.10	32.91	-0.009	-2.17E-03	-78.6	-36.9	291880
22	34.70	26.21	-0.008	-2.10E-03	-66.8	-65.6	291880
		151.94	-0.008	-2.10E-03	-66.8	-65.6	

(continued)

Stage No.7 Excavate to elevation 38.50 on LEFT side
Toe of berm at elevation 35.10
Width of top of berm = 1.00
Width of toe of berm = 7.80

Node no.	Y coord	Nett pressure	Wall disp.	Wall rotation	Shear force	Bending moment	Prop forces	EI of wall
		kN/m2	m	rad.	kN/m	kN.m/m	kN/m	kN.m2/m
23	34.15	108.91	-0.007	-1.97E-03	5.0	-79.2		291880
24	33.60	70.24	-0.006	-1.84E-03	54.2	-59.8		291880
25	33.15	-19.12	-0.005	-1.78E-03	65.7	-28.2		291880
26	32.70	-222.48	-0.004	-1.76E-03	11.4	-0.0		0
27	32.60	-1.86	-0.004	0	0.1	0.0		0
28	32.40	-3.24	-0.004	0	-0.4	0.0		0
29	30.60	1.29	-0.003	0	-2.1	0.0		0
30	28.80	0.14	-0.003	0	-0.8	0.0		0
31	25.60	0.12	-0.002	0	-0.4	0.0		0
32	22.80	-0.02	-0.001	0	-0.3	0.0		0
33	20.00	0.21	-0.000	0	-0.0	0.0		---

At elev. 43.00 Prop force = 112.7 kN/m run (horiz.)
= 124.3 kN/m run (inclined)

LEFT side

Node no.	Y coord	Water press.	Effective stresses: Vertic-al	Active limit	Passive limit	Earth press.	Total earth press.	Adjusted soil modulus
		kN/m2	kN/m2	kN/m2	kN/m2	kN/m2	kN/m2	kN/m2
1	46.10	0.00	0.00	0.00	0.00	0.00	0.00	0.0
2	45.50	0.00	0.00	0.00	0.00	0.00	0.00	0.0
3	44.75	0.00	0.00	0.00	0.00	0.00	0.00	0.0
4	44.00	0.00	0.00	0.00	0.00	0.00	0.00	0.0
5	43.50	0.00	0.00	0.00	0.00	0.00	0.00	0.0
6	43.00	0.00	0.00	0.00	0.00	0.00	0.00	0.0
7	42.50	0.00	0.00	0.00	0.00	0.00	0.00	0.0
8	41.70	0.00	0.00	0.00	0.00	0.00	0.00	0.0
9	41.10	0.00	0.00	0.00	0.00	0.00	0.00	0.0
10	40.55	0.00	0.00	0.00	0.00	0.00	0.00	0.0
11	40.00	0.00	0.00	0.00	0.00	0.00	0.00	0.0
12	39.20	0.00	0.00	0.00	0.00	0.00	0.00	0.0
13	39.00	0.00	0.00	0.00	0.00	0.00	0.00	0.0
14	38.60	0.00	0.00	0.00	0.00	0.00	0.00	0.0
15	38.50	0.00	0.00	0.00	0.00	0.00	0.00	0.0
		0.00	0.00	0.00	22.47b	22.47	22.47p	20000
16	38.05	0.00	8.10	0.00	38.44b	38.44	38.44p	20000
17	37.60	0.00	16.20	0.00	38.31b	38.31	38.31p	20000
18	36.85	0.00	29.70	2.28	55.14b	55.14	55.14p	20000
19	36.10	0.00	43.21	6.13	70.62b	58.58	58.58	20000
20	35.40	0.00	55.82	9.72	86.26b	63.62	63.62	20000
		0.00	55.82	1.77	319.98b	106.65	106.65	49999
21	35.10	0.00	61.53	3.07	236.31b	99.40	99.40	49999
22	34.70	3.60	65.55	3.99	161.71b	92.19	95.79	49999

	3.60	65.55	0.00	988.79	193.34	196.94	149997
23	34.15	8.55	71.62	0.00	947.47	145.36	153.91	149997
24	33.60	13.50	77.70	0.00	799.71b	101.74	115.24	149997
25	33.15	17.55	82.68	0.00	714.31b	55.16	72.71	149997
26	32.70	21.60	87.66	0.00	750.32b	0.00	21.60a	149997
27	32.60	22.50	88.77	0.00	767.11b	64.38	86.88	149997
28	32.40	24.30	90.98	0.00	808.26b	63.88	88.18	149997
29	30.60	40.50	110.99	0.00	967.55b	68.10	108.60	149997
30	28.80	45.00	142.81	0.00	1265.14b	77.24	122.24	149997
31	25.60	50.00	202.69	0.00	1715.84b	97.98	147.98	149997
32	22.80	78.00	231.82	0.00	1959.33b	107.92	185.92	149997

(continued)

Stage No.7 Excavate to elevation 38.50 on LEFT side
Toe of berm at elevation 35.10
Width of top of berm = 1.00
Width of toe of berm = 7.80

LEFT side

Node no.	Y coord	Effective stresses: Water press.	Vertic -al	Active limit	Passive limit	Earth press.	Total earth press.	Adjusted soil modulus
		kN/m2	kN/m2	kN/m2	kN/m2	kN/m2	kN/m2	kN/m2
33	20.00	106.00	261.29	0.00	2186.43b	118.18	224.18	149997

RIGHT side

Node no.	Y coord	Effective stresses: Water press.	Vertic -al	Active limit	Passive limit	Earth press.	Total earth press.	Adjusted soil modulus
		kN/m2	kN/m2	kN/m2	kN/m2	kN/m2	kN/m2	kN/m2
1	46.10	0.00	0.00	0.00	0.00	0.00	0.00	0.0
2	45.50	0.00	0.00	0.00	0.00	0.00	0.00	0.0
		0.00	0.00	0.00	26.45	16.82	16.82	19999
3	44.75	0.00	17.66	0.00	93.78	12.39	12.39	19999
4	44.00	0.00	31.59	3.33	146.89	10.90	10.90	19999
5	43.50	0.00	40.72	6.16	181.68	9.85	9.85	19999
6	43.00	0.00	49.81	8.99	216.35	9.16	9.16	19999
7	42.50	0.00	58.89	11.81	250.97	7.05	7.05A	19999
8	41.70	0.00	73.42	16.32	306.33	7.68	7.68A	19999
9	41.10	6.00	78.30	17.83	324.96	6.48	12.48A	19999
10	40.55	11.50	82.78	19.22	342.03	6.07	17.57A	19999
11	40.00	17.00	87.25	20.61	359.07	20.61	37.61a	19999
12	39.20	25.00	93.74	22.63	383.79	22.63	47.63a	19999
		25.00	93.74	20.53	430.38	20.53	45.53a	19999
13	39.00	27.00	95.35	20.99	437.32	20.99	47.99a	19999
14	38.60	31.00	98.59	21.91	451.18	21.91	52.91a	19999
15	38.50	32.00	99.39	22.14	454.64	22.14	54.14a	19999
16	38.05	36.50	103.02	23.18	470.19	23.18	59.68a	19999
17	37.60	41.00	106.64	24.21	485.70	24.21	65.21a	19999
18	36.85	45.00	116.15	26.92	526.49	26.92	71.92a	19999
19	36.10	45.00	129.64	30.76	584.34	33.39	78.39	19999
20	35.40	45.00	142.22	34.35	638.26	40.54	85.54	19999
		45.00	142.22	21.54	905.76	0.00	45.00A	49997
21	35.10	45.00	147.90	22.85	939.18	21.49	66.49A	49997
22	34.70	45.00	155.48	24.58	983.71	24.58	69.58a	49997
		45.00	155.48	0.00	1742.26	0.00	45.00a	149992
23	34.15	45.00	166.44	0.00	1834.07	0.00	45.00a	149992
24	33.60	45.00	177.39	0.00	1925.81	0.00	45.00a	149992
25	33.15	45.00	186.34	0.00	2000.83	46.83	91.83	149992
26	32.70	45.00	195.29	0.00	2075.81	199.08	244.08	149992
27	32.60	45.00	197.28	0.00	2092.47	43.74	88.74	149992
28	32.40	45.00	201.25	0.00	2125.78	46.42	91.42	149992
29	30.60	45.00	237.01	0.00	2425.38	62.30	107.30	149992

30	28.80	45.00	272.74	0.91	2724.73	77.10	122.10	149992
31	25.60	49.00	332.24	11.74	3223.21	98.86	147.86	149992
32	22.80	77.00	359.81	16.76	3454.22	108.94	185.94	149992
33	20.00	105.00	387.42	21.78	3685.50	118.97	223.97	149992

Legend: 45.00 a Soil pressure at active limit
55.14 p Soil pressure at passive limit
2186.43 b Passive limit reduced because of berm
66.49 A Arching - soil pressure below active limit

Units: kN,m

Stage No.7 Excav. to elev. 38.50 on LEFT side

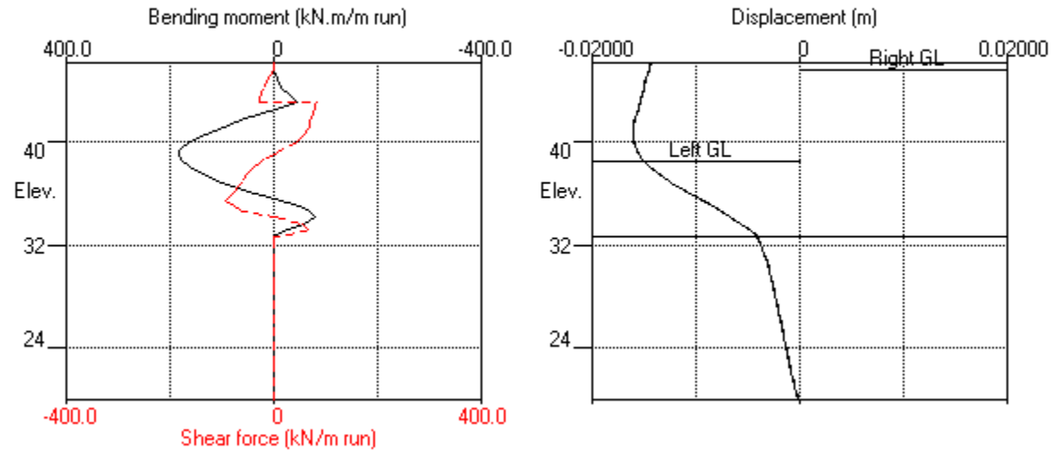

Stage No.7 Excav. to elev. 38.50 on LEFT side

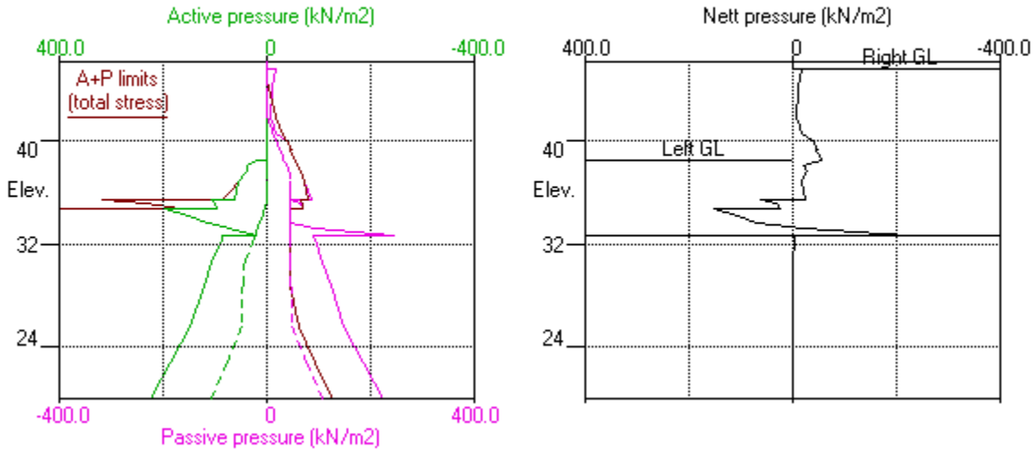

Units: kN,m

Stage No.9 Excav. to elev. 35.10 on LEFT side

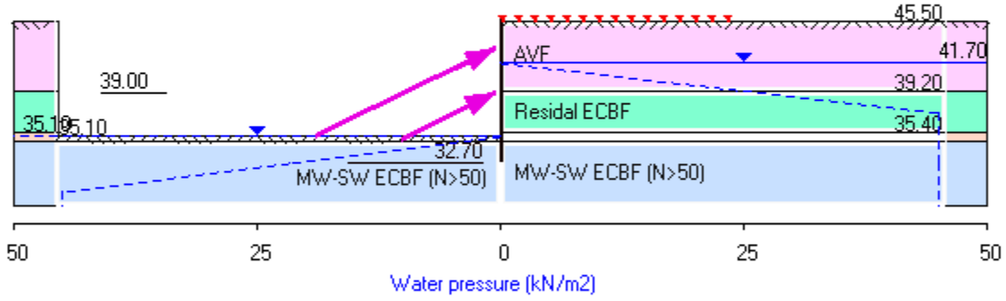

TONKIN + TAYLOR LTD | Sheet No.
Program: WALLAP Version 6.09 Revision A61.B78.R61 | Job No.
Licensed from GEOSOLVE | Made by :
Data filename/Run ID: 20261027_UoA_Section2_Prop_DeflectionEnvelope
New data set - contains default parameters | Date:28-10-2026
Please modify / add | Checked :

Units: kN,m

Stage No. 9 Excavate to elevation 35.10 on LEFT side

STABILITY ANALYSIS of Fully Embedded Wall according to Strength Factor method
Factor of safety on soil strength

Stage No.	Ground level Act.	Ground level Pass.	Prop Elev.	FoS for toe elev. = 32.70 Factor of Safety	Moment equilib. at elev.	Toe elev. for FoS = 1.500 Toe elev.	Wall Penetr -ation	Direction of failure
9	35.10	45.50		More than one prop. No FoS calc.				

BENDING MOMENT and DISPLACEMENT ANALYSIS of Fully Embedded Wall
Analysis options
2-D finite element model. Active limit arching modelled.
Soil deformations are elastic until the active or passive limit is reached
Open Tension Crack analysis - No

Length of wall perpendicular to section = 1000.00m
Rigid boundaries: Left side 40.00m from wall Rough
Right side 40.00m from wall Rough
Lower boundary at elevation 20.00m Rough
Soil-wall interface Smooth

*** Wall displacements reset to zero at stage 3

Node no.	Y coord	Nett pressure kN/m2	Wall disp. m	Wall rotation rad.	Shear force kN/m	Bending moment kN.m/m	Prop forces kN/m	EI of wall kN.m2/m
1	46.10	0.00	-0.014	4.54E-04	0.0	-0.0		291880
2	45.50	0.00	-0.014	4.54E-04	0.0	0.0		291880
		-20.47	-0.014	4.54E-04	0.0	-0.0		
3	44.75	-15.98	-0.014	4.62E-04	-13.7	-6.6		291880
4	44.00	-14.31	-0.015	5.00E-04	-25.0	-22.0		291880
5	43.50	-13.08	-0.015	5.51E-04	-31.9	-36.5		291880
6	43.00	-12.24	-0.015	6.30E-04	-38.2	-54.3	113.9	291880
		-12.24	-0.015	6.30E-04	75.7	-54.3		
7	42.50	-9.92	-0.016	6.94E-04	70.2	-18.2		291880
8	41.70	-10.32	-0.016	6.79E-04	62.1	32.6		291880
9	41.10	-14.77	-0.017	5.79E-04	54.6	67.6		291880
10	40.55	-19.40	-0.017	4.30E-04	45.2	95.0		291880
11	40.00	-38.60	-0.017	2.35E-04	29.2	116.6		291880
12	39.20	-47.68	-0.017	-9.04E-05	-5.3	126.5		291880
		-45.58	-0.017	-9.04E-05	-5.3	126.5		
13	39.00	-46.62	-0.017	-1.74E-04	-14.5	124.5	110.7	291880
		-46.62	-0.017	-1.74E-04	96.2	124.5		
14	38.60	-50.55	-0.017	-3.65E-04	76.8	159.1		291880
15	38.50	-50.17	-0.017	-4.20E-04	71.8	166.6		291880
16	38.05	-54.02	-0.017	-6.93E-04	48.3	193.2		291880
17	37.60	-56.94	-0.016	-1.00E-03	23.4	209.4		291880
18	36.85	-61.18	-0.015	-1.53E-03	-20.9	209.2		291880
19	36.10	-75.76	-0.014	-2.02E-03	-72.3	175.9		291880
20	35.40	-79.35	-0.013	-2.36E-03	-126.6	106.4		291880
		-66.54	-0.013	-2.36E-03	-126.6	106.4		
21	35.10	-67.85	-0.012	-2.45E-03	-146.7	65.5		291880
		1.83	-0.012	-2.45E-03	-146.7	65.5		
22	34.70	27.21	-0.011	-2.51E-03	-140.9	7.3		291880
		196.17	-0.011	-2.51E-03	-140.9	7.3		
23	34.15	146.67	-0.009	-2.48E-03	-46.6	-40.4		291880

(continued)

Stage No.9 Excavate to elevation 35.10 on LEFT side

Node no.	Y coord	Nett pressure	Wall disp.	Wall rotation	Shear force	Bending moment	Prop forces	EI of wall
		kN/m2	m	rad.	kN/m	kN.m/m	kN/m	kN.m2/m
24	33.60	95.46	-0.008	-2.41E-03	19.9	-43.7		291880
25	33.15	24.80	-0.007	-2.36E-03	47.0	-25.0		291880
26	32.70	-189.10	-0.006	-2.34E-03	10.0	-0.0		0
27	32.60	-4.15	-0.006	0	0.4	0.0		0
28	32.40	-3.23	-0.006	0	-0.4	0.0		0
29	30.60	1.29	-0.005	0	-2.1	0.0		0
30	28.80	0.15	-0.004	0	-0.8	0.0		0
31	25.60	0.11	-0.003	0	-0.4	0.0		0
32	22.80	-0.03	-0.002	0	-0.3	0.0		0
33	20.00	0.22	-0.000	0	-0.0	0.0		---

At elev. 43.00 Prop force = 113.9 kN/m run (horiz.)
= 125.7 kN/m run (inclined)

At elev. 39.00 Prop force = 110.7 kN/m run (horiz.)
= 122.2 kN/m run (inclined)

		LEFT side						
			Effective stresses				Total earth	Adjusted soil
Node no.	Y coord	Water press.	Vertic -al	Active limit	Passive limit	Earth press.	press.	modulus
		kN/m2	kN/m2	kN/m2	kN/m2	kN/m2	kN/m2	kN/m2
1	46.10	0.00	0.00	0.00	0.00	0.00	0.00	0.0
2	45.50	0.00	0.00	0.00	0.00	0.00	0.00	0.0
3	44.75	0.00	0.00	0.00	0.00	0.00	0.00	0.0
4	44.00	0.00	0.00	0.00	0.00	0.00	0.00	0.0
5	43.50	0.00	0.00	0.00	0.00	0.00	0.00	0.0
6	43.00	0.00	0.00	0.00	0.00	0.00	0.00	0.0
7	42.50	0.00	0.00	0.00	0.00	0.00	0.00	0.0
8	41.70	0.00	0.00	0.00	0.00	0.00	0.00	0.0
9	41.10	0.00	0.00	0.00	0.00	0.00	0.00	0.0
10	40.55	0.00	0.00	0.00	0.00	0.00	0.00	0.0
11	40.00	0.00	0.00	0.00	0.00	0.00	0.00	0.0
12	39.20	0.00	0.00	0.00	0.00	0.00	0.00	0.0
13	39.00	0.00	0.00	0.00	0.00	0.00	0.00	0.0
14	38.60	0.00	0.00	0.00	0.00	0.00	0.00	0.0
15	38.50	0.00	0.00	0.00	0.00	0.00	0.00	0.0
16	38.05	0.00	0.00	0.00	0.00	0.00	0.00	0.0
17	37.60	0.00	0.00	0.00	0.00	0.00	0.00	0.0
18	36.85	0.00	0.00	0.00	0.00	0.00	0.00	0.0
19	36.10	0.00	0.00	0.00	0.00	0.00	0.00	0.0
20	35.40	0.00	0.00	0.00	0.00	0.00	0.00	0.0
21	35.10	0.00	0.00	0.00	0.00	0.00	0.00	0.0
		0.00	0.00	0.00	69.68	69.68	69.68p	49999
22	34.70	3.60	4.00	0.00	93.19	93.19	96.79p	49999
		3.60	4.00	0.00	473.16	237.57	241.17	149998
23	34.15	8.55	10.05	0.00	523.85	183.12	191.67	149998
24	33.60	13.50	16.10	0.00	574.57	126.96	140.46	149998
25	33.15	17.55	21.06	0.00	616.08	66.93	84.48	149998
26	32.70	21.60	26.02	0.00	657.62	16.82	38.42	149998
27	32.60	22.50	27.12	0.00	666.85	53.14	75.64	149998
28	32.40	24.30	29.32	0.00	685.33	53.88	78.18	149998
29	30.60	40.50	49.21	0.00	851.95	58.06	98.56	149998
30	28.80	45.00	80.90	0.00	1117.45	67.16	112.16	149998
31	25.60	50.00	140.60	0.00	1617.59	87.77	137.77	149998
32	22.80	78.00	169.68	0.00	1861.21	97.59	175.59	149998
33	20.00	106.00	199.25	0.00	2108.96	107.76	213.76	149998

(continued)

Stage No.9 Excavate to elevation 35.10 on LEFT side

		RIGHT side						
			Effective stresses				Total	Adjusted
Node no.	Y coord	Water press.	Vertic -al	Active limit	Passive limit	Earth press.	earth press.	soil modulus
		kN/m2	kN/m2	kN/m2	kN/m2	kN/m2	kN/m2	kN/m2
1	46.10	0.00	0.00	0.00	0.00	0.00	0.00	0.0
2	45.50	0.00	0.00	0.00	0.00	0.00	0.00	0.0
		0.00	0.00	0.00	26.45	20.47	20.47	19999
3	44.75	0.00	17.66	0.00	93.78	15.98	15.98	19999
4	44.00	0.00	31.59	3.33	146.89	14.31	14.31	19999
5	43.50	0.00	40.72	6.16	181.68	13.08	13.08	19999
6	43.00	0.00	49.81	8.99	216.35	12.24	12.24	19999
7	42.50	0.00	58.89	11.81	250.97	9.92	9.92A	19999
8	41.70	0.00	73.42	16.32	306.33	10.32	10.32A	19999
9	41.10	6.00	78.30	17.83	324.96	8.77	14.77A	19999
10	40.55	11.50	82.78	19.22	342.03	7.90	19.40A	19999
11	40.00	17.00	87.25	20.61	359.07	21.60	38.60	19999
12	39.20	25.00	93.74	22.63	383.79	22.68	47.68	19999
		25.00	93.74	20.53	430.38	20.58	45.58	19999
13	39.00	27.00	95.35	20.99	437.32	19.62	46.62A	19999
14	38.60	31.00	98.59	21.91	451.18	19.55	50.55A	19999
15	38.50	32.00	99.39	22.14	454.64	18.17	50.17A	19999
16	38.05	36.50	103.02	23.18	470.19	17.52	54.02A	19999
17	37.60	41.00	106.64	24.21	485.70	15.94	56.94A	19999
18	36.85	45.00	116.15	26.92	526.49	16.18	61.18A	19999
19	36.10	45.00	129.64	30.76	584.34	30.76	75.76a	19999
20	35.40	45.00	142.22	34.35	638.26	34.35	79.35a	19999
		45.00	142.22	21.54	905.76	21.54	66.54a	49997
21	35.10	45.00	147.90	22.85	939.18	22.85	67.85a	49997
22	34.70	45.00	155.48	24.58	983.71	24.58	69.58a	49997
		45.00	155.48	0.00	1742.26	0.00	45.00a	149992
23	34.15	45.00	166.44	0.00	1834.07	0.00	45.00a	149992
24	33.60	45.00	177.39	0.00	1925.81	0.00	45.00a	149992
25	33.15	45.00	186.34	0.00	2000.83	14.68	59.68	149992
26	32.70	45.00	195.29	0.00	2075.81	182.52	227.52	149992
27	32.60	45.00	197.28	0.00	2092.47	34.78	79.78	149992
28	32.40	45.00	201.25	0.00	2125.78	36.41	81.41	149992
29	30.60	45.00	237.01	0.00	2425.38	52.26	97.26	149992
30	28.80	45.00	272.74	0.91	2724.73	67.01	112.01	149992
31	25.60	49.00	332.24	11.74	3223.21	88.66	137.66	149992
32	22.80	77.00	359.81	16.76	3454.22	98.61	175.61	149992
33	20.00	105.00	387.42	21.78	3685.50	108.54	213.54	149992

Legend: 45.00 a Soil pressure at active limit
96.79 p Soil pressure at passive limit
61.18 A Arching - soil pressure below active limit

Units: kN,m

Stage No.9 Excav. to elev. 35.10 on LEFT side

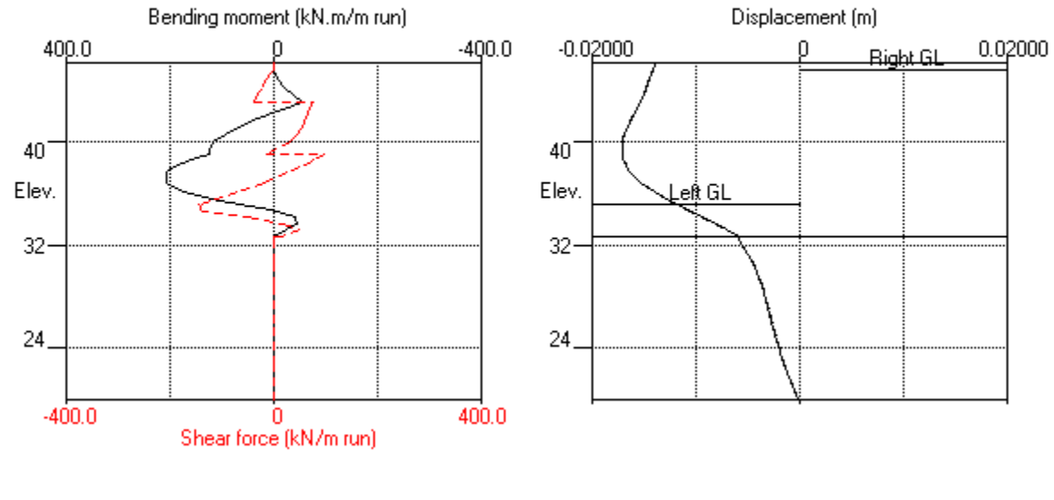

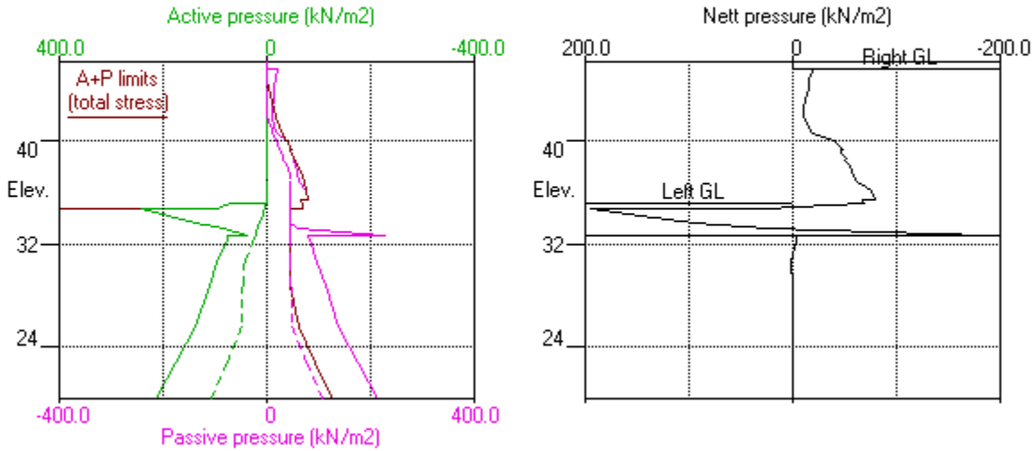

Units: kN,m

Stage No.10 Fill to elev. 36.10 on LEFT side

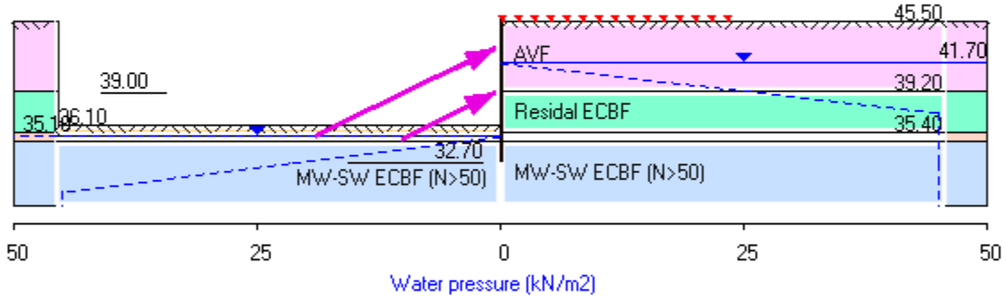

TONKIN + TAYLOR LTD | Sheet No.
Program: WALLAP Version 6.09 Revision A61.B78.R61 | Job No.
Licensed from GEOSOLVE | Made by :
Data filename/Run ID: 20261027_UoA_Section2_Prop_DeflectionEnvelope
New data set - contains default parameters | Date:28-10-2026
Please modify / add | Checked :

Units: kN,m

Stage No. 10 Fill to elevation 36.10 on LEFT side with soil type 5

STABILITY ANALYSIS of Fully Embedded Wall according to Strength Factor method
Factor of safety on soil strength

Stage No.	Ground level Act.	Prop Pass.	FoS for toe elev. = 32.70 Prop Elev.	Factor of Safety	Moment equilib. at elev.	Toe elev. for FoS = 1.500 Toe elev.	Wall Penetr -ation	Direction of failure
10	36.10	45.50	More than one prop. No FoS calc.					

BENDING MOMENT and DISPLACEMENT ANALYSIS of Fully Embedded Wall
Analysis options
2-D finite element model. Active limit arching modelled.
Soil deformations are elastic until the active or passive limit is reached
Open Tension Crack analysis - No

Length of wall perpendicular to section = 1000.00m

Rigid boundaries: Left side 40.00m from wall Rough
Right side 40.00m from wall Rough
Lower boundary at elevation 20.00m Rough
Soil-wall interface Smooth

*** Wall displacements reset to zero at stage 3

Node no.	Y coord	Nett pressure kN/m2	Wall disp. m	Wall rotation rad.	Shear force kN/m	Bending moment kN.m/m	Prop forces kN/m	EI of wall kN.m2/m
1	46.10	0.00	-0.014	4.53E-04	0.0	-0.0		291880
2	45.50	0.00	-0.014	4.53E-04	0.0	0.0		291880
		-20.40	-0.014	4.53E-04	0.0	-0.0		
3	44.75	-15.87	-0.014	4.62E-04	-13.6	-6.6		291880
4	44.00	-14.16	-0.015	4.99E-04	-24.9	-21.9		291880
5	43.50	-12.91	-0.015	5.50E-04	-31.6	-36.3		291880
6	43.00	-12.04	-0.015	6.29E-04	-37.9	-54.0	114.0	291880
		-12.04	-0.015	6.29E-04	76.1	-54.0		
7	42.50	-9.71	-0.016	6.92E-04	70.7	-17.6		291880
8	41.70	-10.07	-0.016	6.74E-04	62.8	33.6		291880
9	41.10	-14.49	-0.017	5.72E-04	55.4	69.1		291880
10	40.55	-19.11	-0.017	4.20E-04	46.2	97.0		291880
11	40.00	-38.29	-0.017	2.21E-04	30.4	119.2		291880
12	39.20	-47.35	-0.017	-1.13E-04	-3.9	130.1		291880
		-45.26	-0.017	-1.13E-04	-3.9	130.1		
13	39.00	-46.31	-0.017	-2.00E-04	-13.0	128.4	108.2	291880
		-46.31	-0.017	-2.00E-04	95.2	128.4		
14	38.60	-50.25	-0.017	-3.95E-04	75.9	162.6		291880
15	38.50	-49.89	-0.017	-4.52E-04	70.9	170.0		291880
16	38.05	-53.78	-0.017	-7.30E-04	47.6	196.3		291880
17	37.60	-56.76	-0.016	-1.04E-03	22.7	212.2		291880
18	36.85	-65.93	-0.015	-1.58E-03	-23.3	211.5		291880
19	36.10	-75.80	-0.014	-2.07E-03	-76.4	175.1		291880
20	35.40	-75.56	-0.012	-2.41E-03	-129.4	102.9		291880
		-62.80	-0.012	-2.41E-03	-129.4	102.9		
21	35.10	-64.51	-0.012	-2.49E-03	-148.5	61.4		291880
		7.75	-0.012	-2.49E-03	-148.5	61.4		
22	34.70	32.90	-0.011	-2.54E-03	-140.4	2.9		291880
		199.89	-0.011	-2.54E-03	-140.4	2.9		
23	34.15	148.45	-0.009	-2.51E-03	-44.6	-43.9		291880

(continued)

Stage No.10 Fill to elevation 36.10 on LEFT side with soil type 5

Node no.	Y coord	Nett pressure	Wall disp.	Wall rotation	Shear force	Bending moment	Prop forces	EI of wall
		kN/m2	m	rad.	kN/m	kN.m/m	kN/m	kN.m2/m
24	33.60	95.73	-0.008	-2.43E-03	22.5	-45.8		291880
25	33.15	23.48	-0.007	-2.38E-03	49.4	-25.9		291880
26	32.70	-196.62	-0.006	-2.36E-03	10.4	-0.0		0
27	32.60	-4.15	-0.006	0	0.4	0.0		0
28	32.40	-3.24	-0.006	0	-0.4	0.0		0
29	30.60	1.29	-0.004	0	-2.1	0.0		0
30	28.80	0.15	-0.003	0	-0.8	0.0		0
31	25.60	0.11	-0.002	0	-0.4	0.0		0
32	22.80	-0.02	-0.001	0	-0.3	0.0		0
33	20.00	0.22	-0.000	0	-0.0	0.0		---

At elev. 43.00 Prop force = 114.0 kN/m run (horiz.)
= 125.8 kN/m run (inclined)

At elev. 39.00 Prop force = 108.2 kN/m run (horiz.)
= 119.4 kN/m run (inclined)

		LEFT side						
			Effective stresses				Total earth	Adjusted soil
Node no.	Y coord	Water press.	Vertic -al	Active limit	Passive limit	Earth press.	press.	modulus
		kN/m2	kN/m2	kN/m2	kN/m2	kN/m2	kN/m2	kN/m2
1	46.10	0.00	0.00	0.00	0.00	0.00	0.00	0.0
2	45.50	0.00	0.00	0.00	0.00	0.00	0.00	0.0
3	44.75	0.00	0.00	0.00	0.00	0.00	0.00	0.0
4	44.00	0.00	0.00	0.00	0.00	0.00	0.00	0.0
5	43.50	0.00	0.00	0.00	0.00	0.00	0.00	0.0
6	43.00	0.00	0.00	0.00	0.00	0.00	0.00	0.0
7	42.50	0.00	0.00	0.00	0.00	0.00	0.00	0.0
8	41.70	0.00	0.00	0.00	0.00	0.00	0.00	0.0
9	41.10	0.00	0.00	0.00	0.00	0.00	0.00	0.0
10	40.55	0.00	0.00	0.00	0.00	0.00	0.00	0.0
11	40.00	0.00	0.00	0.00	0.00	0.00	0.00	0.0
12	39.20	0.00	0.00	0.00	0.00	0.00	0.00	0.0
13	39.00	0.00	0.00	0.00	0.00	0.00	0.00	0.0
14	38.60	0.00	0.00	0.00	0.00	0.00	0.00	0.0
15	38.50	0.00	0.00	0.00	0.00	0.00	0.00	0.0
16	38.05	0.00	0.00	0.00	0.00	0.00	0.00	0.0
17	37.60	0.00	0.00	0.00	0.00	0.00	0.00	0.0
18	36.85	0.00	0.00	0.00	0.00	0.00	0.00	0.0
19	36.10	0.00	0.00	0.00	0.00	0.00	0.00	0.0
		0.00	0.00	0.00	0.00	0.00	0.00	149998
20	35.40	0.00	14.00	2.00	175.94	3.81	3.81	149998
21	35.10	0.00	20.00	2.86	251.35	3.61	3.61	149998
		0.00	20.00	0.00	187.26	75.88	75.88	49999
22	34.70	3.60	24.00	0.00	210.79	99.33	102.93	49999
		3.60	24.00	0.00	640.74	242.65	246.25	149998
23	34.15	8.55	30.06	0.00	691.48	187.33	195.88	149998
24	33.60	13.50	36.12	0.00	742.24	130.46	143.96	149998
25	33.15	17.55	41.08	0.00	783.81	69.65	87.20	149998
26	32.70	21.60	46.04	0.00	825.40	16.44	38.04	149998
27	32.60	22.50	47.15	0.00	834.65	56.52	79.02	149998
28	32.40	24.30	49.36	0.00	853.16	57.26	81.56	149998
29	30.60	40.50	69.28	0.00	1020.10	61.44	101.94	149998
30	28.80	45.00	101.02	0.00	1286.00	70.54	115.54	149998
31	25.60	50.00	160.80	0.00	1786.84	91.16	141.16	149998
32	22.80	78.00	189.93	0.00	2030.88	100.98	178.98	149998
33	20.00	106.00	219.51	0.00	2278.71	111.15	217.15	149998

(continued)

Stage No.10 Fill to elevation 36.10 on LEFT side with soil type 5

		RIGHT side						
			Effective stresses				Total	Adjusted
Node no.	Y coord	Water press.	Vertic -al	Active limit	Passive limit	Earth press.	earth press.	soil modulus
		kN/m2	kN/m2	kN/m2	kN/m2	kN/m2	kN/m2	kN/m2
1	46.10	0.00	0.00	0.00	0.00	0.00	0.00	0.0
2	45.50	0.00	0.00	0.00	0.00	0.00	0.00	0.0
		0.00	0.00	0.00	26.45	20.40	20.40	19999
3	44.75	0.00	17.66	0.00	93.78	15.87	15.87	19999
4	44.00	0.00	31.59	3.33	146.89	14.16	14.16	19999
5	43.50	0.00	40.72	6.16	181.68	12.91	12.91	19999
6	43.00	0.00	49.81	8.99	216.35	12.04	12.04	19999
7	42.50	0.00	58.89	11.81	250.97	9.71	9.71A	19999
8	41.70	0.00	73.42	16.32	306.33	10.07	10.07A	19999
9	41.10	6.00	78.30	17.83	324.96	8.49	14.49A	19999
10	40.55	11.50	82.78	19.22	342.03	7.61	19.11A	19999
11	40.00	17.00	87.25	20.61	359.07	21.29	38.29	19999
12	39.20	25.00	93.74	22.63	383.79	22.35	47.35A	19999
		25.00	93.74	20.53	430.38	20.26	45.26A	19999
13	39.00	27.00	95.35	20.99	437.32	19.31	46.31A	19999
14	38.60	31.00	98.59	21.91	451.18	19.25	50.25A	19999
15	38.50	32.00	99.39	22.14	454.64	17.89	49.89A	19999
16	38.05	36.50	103.02	23.18	470.19	17.28	53.78A	19999
17	37.60	41.00	106.64	24.21	485.70	15.76	56.76A	19999
18	36.85	45.00	116.15	26.92	526.49	20.93	65.93A	19999
19	36.10	45.00	129.64	30.76	584.34	30.80	75.80	19999
20	35.40	45.00	142.22	34.35	638.26	34.38	79.38	19999
		45.00	142.22	21.54	905.76	21.62	66.62	49997
21	35.10	45.00	147.90	22.85	939.18	23.13	68.13	49997
22	34.70	45.00	155.48	24.58	983.71	25.03	70.03	49997
		45.00	155.48	0.00	1742.26	1.36	46.36	149992
23	34.15	45.00	166.44	0.00	1834.07	2.43	47.43	149992
24	33.60	45.00	177.39	0.00	1925.81	3.23	48.23	149992
25	33.15	45.00	186.34	0.00	2000.83	18.72	63.72	149992
26	32.70	45.00	195.29	0.00	2075.81	189.66	234.66	149992
27	32.60	45.00	197.28	0.00	2092.47	38.17	83.17	149992
28	32.40	45.00	201.25	0.00	2125.78	39.80	84.80	149992
29	30.60	45.00	237.01	0.00	2425.38	55.65	100.65	149992
30	28.80	45.00	272.74	0.91	2724.73	70.39	115.39	149992
31	25.60	49.00	332.24	11.74	3223.21	92.05	141.05	149992
32	22.80	77.00	359.81	16.76	3454.22	102.00	179.00	149992
33	20.00	105.00	387.42	21.78	3685.50	111.93	216.93	149992

Legend: 12.34 a Soil pressure at active limit
123.45 p Soil pressure at passive limit
65.93 A Arching - soil pressure below active limit

Units: kN,m

Stage No.10 Fill to elev. 36.10 on LEFT side

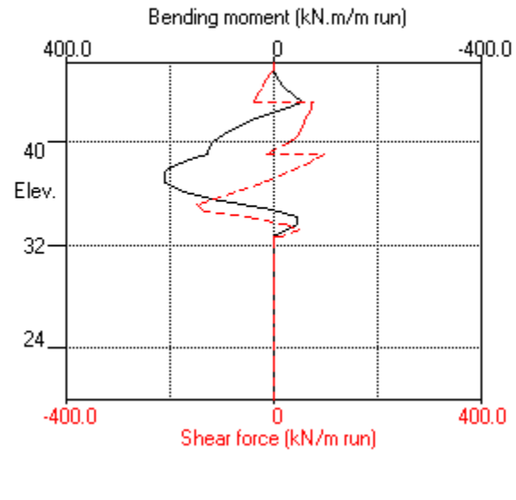

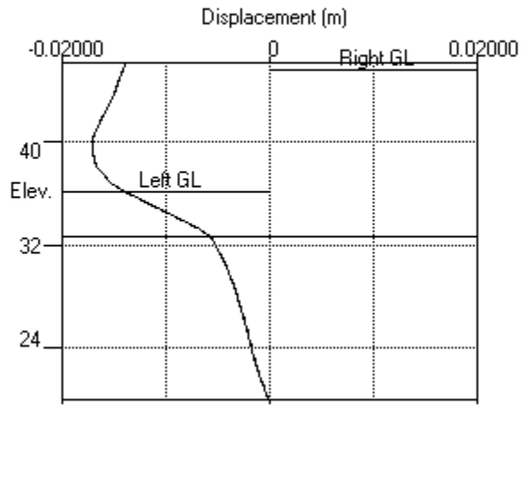

Stage No.10 Fill to elev. 36.10 on LEFT side

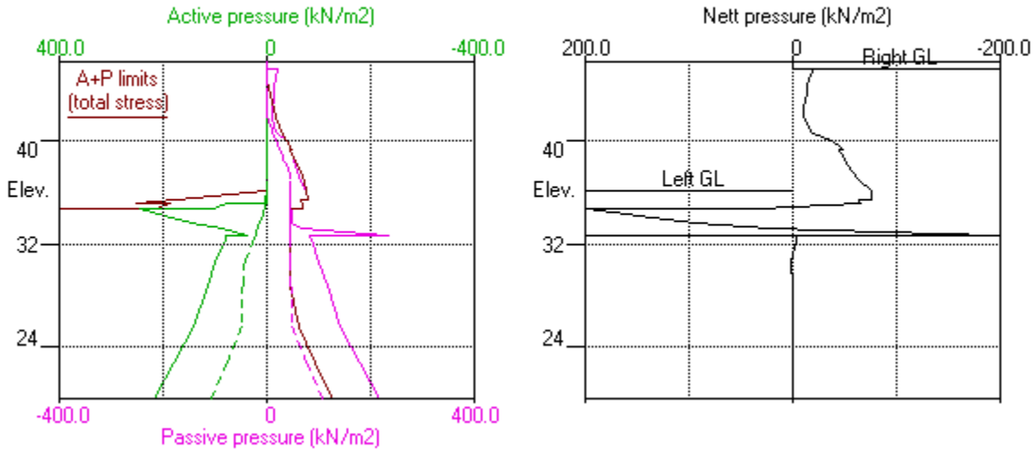

Units: kN,m

Stage No.14 Remove prop no.2 at elev. 39.00

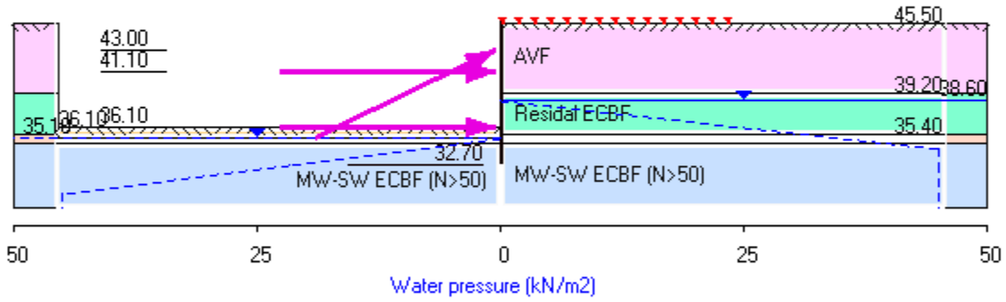

TONKIN + TAYLOR LTD | Sheet No.
Program: WALLAP Version 6.09 Revision A61.B78.R61 | Job No.
Licensed from GEOSOLVE | Made by :
Data filename/Run ID: 20261027_UoA_Section2_Prop_DeflectionEnvelope
New data set - contains default parameters | Date:28-10-2026
Please modify / add | Checked :

Units: kN,m

Stage No. 14 Remove strut or anchor no.2 at elevation 39.00

STABILITY ANALYSIS of Fully Embedded Wall according to Strength Factor method
Factor of safety on soil strength

Stage No.	Ground level Act.	Ground level Pass.	Prop Elev.	FoS for toe elev. = 32.70 Factor of Safety	Moment equilib. at elev.	Toe elev. for FoS = 1.500 Toe elev.	Wall Penetr -ation	Direction of failure
14	36.10	45.50	More than one prop. No FoS calc.					

BENDING MOMENT and DISPLACEMENT ANALYSIS of Fully Embedded Wall
Analysis options
2-D finite element model. Active limit arching modelled.
Soil deformations are elastic until the active or passive limit is reached
Open Tension Crack analysis - No

Length of wall perpendicular to section = 1000.00m
Rigid boundaries: Left side 40.00m from wall Rough
Right side 40.00m from wall Rough
Lower boundary at elevation 20.00m Rough
Soil-wall interface Smooth

*** Wall displacements reset to zero at stage 3

Node no.	Y coord	Nett pressure kN/m2	Wall disp. m	Wall rotation rad.	Shear force kN/m	Bending moment kN.m/m	Prop forces kN/m	EI of wall kN.m2/m
1	46.10	0.00	-0.014	4.40E-04	0.0	-0.0		291880
2	45.50	0.00	-0.014	4.40E-04	0.0	0.0		291880
		-20.39	-0.014	4.40E-04	0.0	-0.0		
3	44.75	-15.96	-0.014	4.49E-04	-13.6	-6.6		291880
4	44.00	-14.37	-0.015	4.86E-04	-25.0	-22.0		291880
5	43.50	-13.20	-0.015	5.37E-04	-31.9	-36.5		291880
6	43.00	-12.43	-0.015	6.16E-04	-38.3	-54.3	104.6	291880
		-12.43	-0.015	6.16E-04	66.2	-54.3		
7	42.50	-10.23	-0.015	6.84E-04	60.6	-22.9		291880
8	41.70	-10.70	-0.016	6.92E-04	52.2	20.0		291880
9	41.10	-11.58	-0.016	6.25E-04	45.5	49.2	38.7	291880
		-11.58	-0.016	6.25E-04	84.2	49.2		
10	40.55	-12.58	-0.017	4.94E-04	77.6	93.6		291880
11	40.00	-27.94	-0.017	2.84E-04	66.4	134.2		291880
12	39.20	-31.92	-0.017	-1.35E-04	42.5	177.7		291880
		-29.82	-0.017	-1.35E-04	42.5	177.7		
13	39.00	-29.63	-0.017	-2.58E-04	36.5	185.6		291880
14	38.60	-31.53	-0.017	-5.17E-04	24.3	197.7		291880
15	38.50	-31.65	-0.017	-5.84E-04	21.1	200.0		291880
16	38.05	-36.11	-0.016	-8.93E-04	5.9	205.8		291880
17	37.60	-40.01	-0.016	-1.20E-03	-11.2	204.7		291880
18	36.85	-52.09	-0.015	-1.70E-03	-45.8	183.0		291880
19	36.10	-66.87	-0.013	-2.10E-03	-90.4	133.3	31.2	291880
		-66.87	-0.013	-2.10E-03	-59.2	133.3		
20	35.40	-69.82	-0.012	-2.35E-03	-107.0	75.1		291880
		-59.33	-0.012	-2.35E-03	-107.0	75.1		
21	35.10	-63.99	-0.011	-2.41E-03	-125.5	40.4		291880
		5.49	-0.011	-2.41E-03	-125.5	40.4		
22	34.70	28.96	-0.010	-2.44E-03	-118.6	-9.2		291880
		180.08	-0.010	-2.44E-03	-118.6	-9.2		

(continued)

Stage No.14 Remove strut or anchor no.2 at elevation 39.00

Node no.	Y coord	Nett pressure	Wall disp.	Wall rotation	Shear force	Bending moment	Prop forces	EI of wall
		kN/m2	m	rad.	kN/m	kN.m/m	kN/m	kN.m2/m
23	34.15	130.91	-0.009	-2.39E-03	-33.1	-47.2		291880
24	33.60	84.11	-0.008	-2.31E-03	26.0	-45.5		291880
25	33.15	17.95	-0.007	-2.26E-03	49.0	-25.1		291880
26	32.70	-190.66	-0.006	-2.24E-03	10.1	-0.0		0
27	32.60	-4.15	-0.006	0	0.4	0.0		0
28	32.40	-3.24	-0.005	0	-0.4	0.0		0
29	30.60	1.29	-0.004	0	-2.1	0.0		0
30	28.80	0.29	-0.003	0	-0.7	0.0		0
31	25.60	-0.00	-0.002	0	-0.2	0.0		0
32	22.80	-0.02	-0.001	0	-0.3	0.0		0
33	20.00	0.22	-0.000	0	-0.0	0.0		---

At elev. 43.00 Prop force = 104.6 kN/m run (horiz.)
= 115.4 kN/m run (inclined)
At elev. 41.10 Prop force = 38.7 kN/m run
At elev. 36.10 Prop force = 31.2 kN/m run

		LEFT side						
		Effective stresses					Total	Adjusted
Node no.	Y coord	Water press.	Vertic -al	Active limit	Passive limit	Earth press.	earth press.	soil modulus
		kN/m2	kN/m2	kN/m2	kN/m2	kN/m2	kN/m2	kN/m2
1	46.10	0.00	0.00	0.00	0.00	0.00	0.00	0.0
2	45.50	0.00	0.00	0.00	0.00	0.00	0.00	0.0
3	44.75	0.00	0.00	0.00	0.00	0.00	0.00	0.0
4	44.00	0.00	0.00	0.00	0.00	0.00	0.00	0.0
5	43.50	0.00	0.00	0.00	0.00	0.00	0.00	0.0
6	43.00	0.00	0.00	0.00	0.00	0.00	0.00	0.0
7	42.50	0.00	0.00	0.00	0.00	0.00	0.00	0.0
8	41.70	0.00	0.00	0.00	0.00	0.00	0.00	0.0
9	41.10	0.00	0.00	0.00	0.00	0.00	0.00	0.0
10	40.55	0.00	0.00	0.00	0.00	0.00	0.00	0.0
11	40.00	0.00	0.00	0.00	0.00	0.00	0.00	0.0
12	39.20	0.00	0.00	0.00	0.00	0.00	0.00	0.0
13	39.00	0.00	0.00	0.00	0.00	0.00	0.00	0.0
14	38.60	0.00	0.00	0.00	0.00	0.00	0.00	0.0
15	38.50	0.00	0.00	0.00	0.00	0.00	0.00	0.0
16	38.05	0.00	0.00	0.00	0.00	0.00	0.00	0.0
17	37.60	0.00	0.00	0.00	0.00	0.00	0.00	0.0
18	36.85	0.00	0.00	0.00	0.00	0.00	0.00	0.0
19	36.10	0.00	0.00	0.00	0.00	0.00	0.00	0.0
		0.00	0.00	0.00	0.00	0.00	0.00	149998
20	35.40	0.00	14.00	2.00	175.94	4.47	4.47	149998
21	35.10	0.00	20.00	2.86	251.35	2.53	2.53A	149998
		0.00	20.00	0.00	187.26	72.02	72.02	49999
22	34.70	3.60	24.00	0.00	210.79	95.68	99.28	49999
		3.60	24.00	0.00	640.74	231.68	235.28	149998
23	34.15	8.55	30.06	0.00	691.48	179.10	187.65	149998
24	33.60	13.50	36.12	0.00	742.24	125.17	138.67	149998
25	33.15	17.55	41.08	0.00	783.81	67.28	84.83	149998
26	32.70	21.60	46.04	0.00	825.40	19.75	41.35	149998
27	32.60	22.50	47.15	0.00	834.65	56.80	79.30	149998
28	32.40	24.30	49.36	0.00	853.16	57.46	81.76	149998
29	30.60	40.50	69.28	0.00	1020.10	61.56	102.06	149998
30	28.80	45.00	101.02	0.00	1286.00	70.65	115.65	149998
31	25.60	50.00	160.80	0.00	1786.84	91.45	141.45	149998
32	22.80	78.00	189.93	0.00	2030.88	101.33	179.33	149998
33	20.00	106.00	219.51	0.00	2278.71	111.52	217.52	149998

(continued)

Stage No.14 Remove strut or anchor no.2 at elevation 39.00

RIGHT side

Node no.	Y coord	Effective stresses: Water press.	Vertic -al	Active limit	Passive limit	Earth press.	Total earth press.	Adjusted soil modulus
		kN/m2	kN/m2	kN/m2	kN/m2	kN/m2	kN/m2	kN/m2
1	46.10	0.00	0.00	0.00	0.00	0.00	0.00	0.0
2	45.50	0.00	0.00	0.00	0.00	0.00	0.00	0.0
		0.00	0.00	0.00	26.45	20.39	20.39	19999
3	44.75	0.00	17.66	0.00	93.78	15.96	15.96	19999
4	44.00	0.00	31.59	3.33	146.89	14.37	14.37	19999
5	43.50	0.00	40.72	6.16	181.68	13.20	13.20	19999
6	43.00	0.00	49.81	8.99	216.35	12.43	12.43	19999
7	42.50	0.00	58.89	11.81	250.97	10.23	10.23A	19999
8	41.70	0.00	73.42	16.32	306.33	10.70	10.70A	19999
9	41.10	0.00	84.30	19.70	347.84	11.58	11.58A	19999
10	40.55	0.00	94.28	22.80	385.87	12.58	12.58A	19999
11	40.00	0.00	104.25	25.89	423.88	27.94	27.94	19999
12	39.20	0.00	118.74	30.39	479.10	31.92	31.92	19999
		0.00	118.74	27.65	537.57	29.82	29.82	19999
13	39.00	0.00	122.35	28.69	553.08	29.63	29.63	19999
14	38.60	0.00	129.59	30.75	584.09	31.53	31.53	19999
15	38.50	1.00	130.39	30.98	587.55	30.65	31.65A	19999
16	38.05	5.50	134.02	32.01	603.10	30.61	36.11A	19999
17	37.60	10.00	137.64	33.04	618.62	30.01	40.01A	19999
18	36.85	17.50	143.65	34.76	644.41	34.59	52.09A	19999
19	36.10	25.00	149.64	36.47	670.10	41.87	66.87	19999
20	35.40	32.00	155.22	38.05	694.00	42.29	74.29	19999
		32.00	155.22	24.52	982.18	31.80	63.80	49997
21	35.10	35.00	157.90	25.14	997.96	31.52	66.52	49997
22	34.70	39.00	161.48	25.95	1018.98	31.31	70.31	49997
		39.00	161.48	0.00	1792.53	16.20	55.20	149992
23	34.15	44.50	166.94	0.00	1838.26	12.24	56.74	149992
24	33.60	45.00	177.39	0.00	1925.81	9.56	54.56	149992
25	33.15	45.00	186.34	0.00	2000.83	21.88	66.88	149992
26	32.70	45.00	195.29	0.00	2075.81	187.01	232.01	149992
27	32.60	45.00	197.28	0.00	2092.47	38.45	83.45	149992
28	32.40	45.00	201.25	0.00	2125.78	40.00	85.00	149992
29	30.60	45.00	237.01	0.00	2425.38	55.76	100.76	149992
30	28.80	45.00	272.74	0.91	2724.73	70.36	115.36	149992
31	25.60	50.00	331.24	11.56	3214.83	91.45	141.45	149992
32	22.80	78.00	358.81	16.58	3445.84	101.35	179.35	149992
33	20.00	106.00	386.42	21.60	3677.12	111.30	217.30	149992

Legend: 12.34 a Soil pressure at active limit
123.45 p Soil pressure at passive limit
52.09 A Arching - soil pressure below active limit

Units: kN,m

Stage No.14 Remove prop no.2 at elev. 39.00

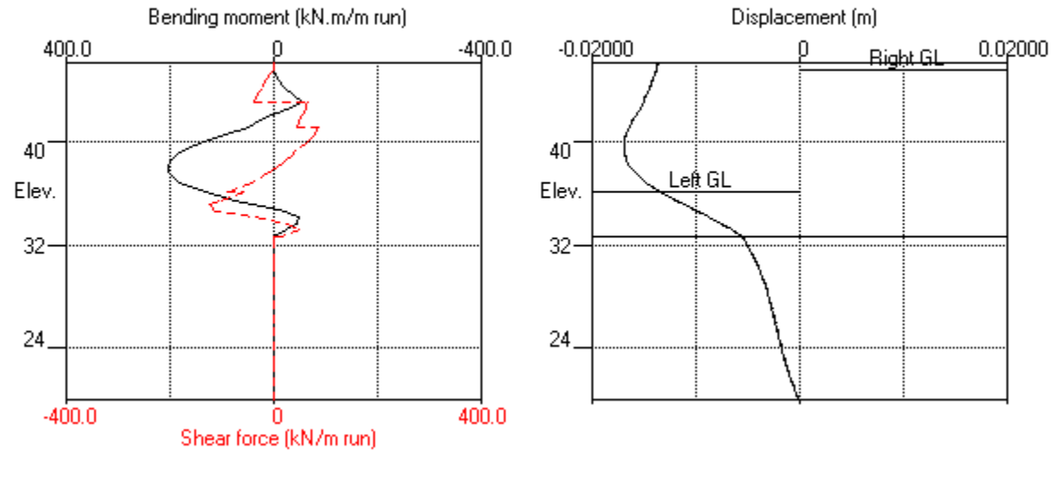

Stage No.14 Remove prop no.2 at elev. 39.00

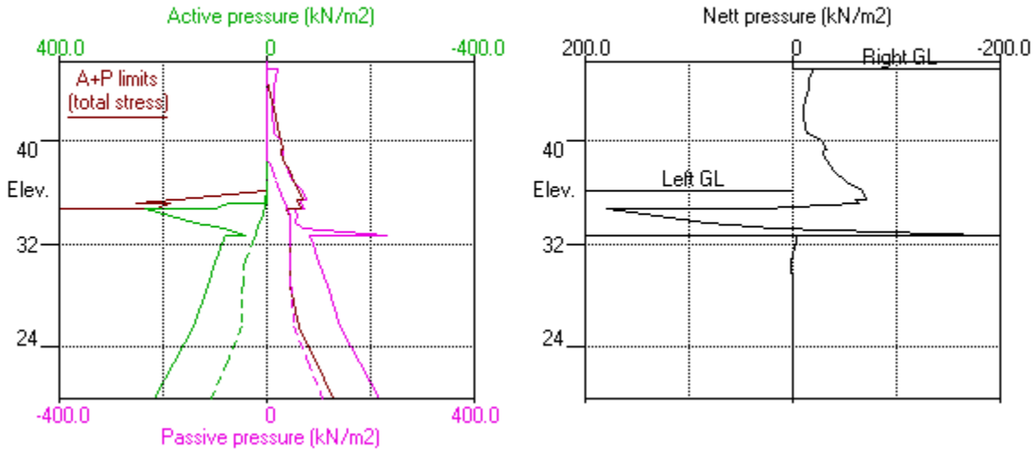

Units: kN,m

Stage No.15 Remove prop no.1 at elev. 43.00

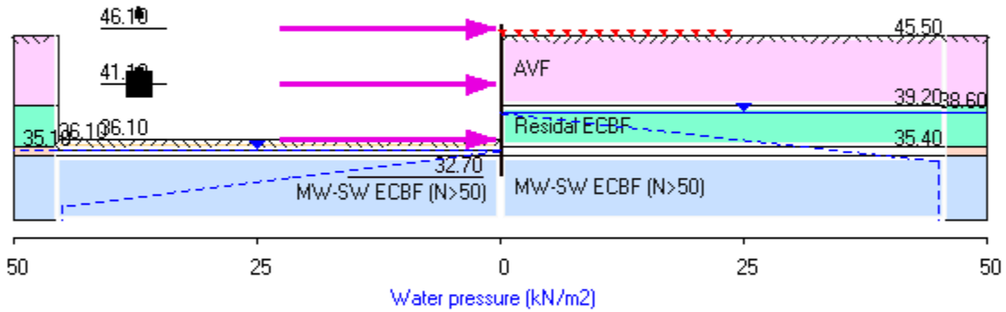

TONKIN + TAYLOR LTD | Sheet No.
Program: WALLAP Version 6.09 Revision A61.B78.R61 | Job No.
Licensed from GEOSOLVE | Made by :
Data filename/Run ID: 20261027_UoA_Section2_Prop_DeflectionEnvelope
New data set - contains default parameters | Date:28-10-2026
Please modify / add | Checked :

Units: kN,m

Stage No. 16 Remove strut or anchor no.1 at elevation 43.00

STABILITY ANALYSIS of Fully Embedded Wall according to Strength Factor method

Factor of safety on soil strength

Stage No.	Ground level Act.	Ground level Pass.	Prop Elev.	FoS for toe elev. = 32.70 Factor of Safety	Moment equilib. at elev.	Toe elev. for FoS = 1.500 Toe elev.	Wall Penetr -ation	Direction of failure
16	36.10	45.50	More than one prop. No FoS calc.					

BENDING MOMENT and DISPLACEMENT ANALYSIS of Fully Embedded Wall

Analysis options

2-D finite element model. Active limit arching modelled.
Soil deformations are elastic until the active or passive limit is reached
Open Tension Crack analysis - No

Length of wall perpendicular to section = 1000.00m

Rigid boundaries: Left side 40.00m from wall Rough
Right side 40.00m from wall Rough
Lower boundary at elevation 20.00m Rough
Soil-wall interface Smooth

*** Wall displacements reset to zero at stage 3

Node no.	Y coord	Nett pressure kN/m2	Wall disp. m	Wall rotation rad.	Shear force kN/m	Bending moment kN.m/m	Prop forces kN/m	EI of wall kN.m2/m
1	46.10	0.00	-0.014	8.20E-04	29.2	0.0	29.2	291880
2	45.50	0.00	-0.014	8.02E-04	29.2	17.5		291880
		-23.09	-0.014	8.02E-04	29.2	17.5		
3	44.75	-15.37	-0.015	7.38E-04	14.8	32.1		291880
4	44.00	-11.42	-0.015	6.49E-04	4.7	38.1		291880
5	43.50	-9.13	-0.016	5.84E-04	-0.4	38.9		291880
6	43.00	-8.16	-0.016	5.20E-04	-4.7	37.3		291880
7	42.50	-6.94	-0.016	4.61E-04	-8.5	33.7		291880
8	41.70	-9.06	-0.017	3.88E-04	-14.9	22.5		291880
9	41.10	-11.51	-0.017	3.57E-04	-21.1	11.7	114.9	291880
		-11.51	-0.017	3.57E-04	93.9	11.7		
10	40.55	-13.23	-0.017	2.92E-04	87.1	61.4		291880
11	40.00	-28.92	-0.017	1.38E-04	75.5	107.1		291880
12	39.20	-32.99	-0.017	-2.17E-04	50.7	157.5		291880
		-30.89	-0.017	-2.17E-04	50.7	157.5		
13	39.00	-30.72	-0.017	-3.26E-04	44.5	167.0		291880
14	38.60	-32.58	-0.017	-5.62E-04	31.9	182.3		291880
15	38.50	-32.65	-0.017	-6.24E-04	28.6	185.3		291880
16	38.05	-37.03	-0.016	-9.13E-04	12.9	194.4		291880
17	37.60	-40.78	-0.016	-1.21E-03	-4.6	196.4		291880
18	36.85	-52.69	-0.015	-1.68E-03	-39.6	179.5		291880
19	36.10	-67.33	-0.013	-2.09E-03	-84.6	134.2	26.2	291880
		-67.33	-0.013	-2.09E-03	-58.5	134.2		
20	35.40	-70.71	-0.012	-2.34E-03	-106.8	76.3		291880
		-60.72	-0.012	-2.34E-03	-106.8	76.3		
21	35.10	-64.61	-0.011	-2.40E-03	-125.6	41.6		291880
		4.99	-0.011	-2.40E-03	-125.6	41.6		
22	34.70	28.64	-0.010	-2.43E-03	-118.9	-8.0		291880
		179.12	-0.010	-2.43E-03	-118.9	-8.0		
23	34.15	130.55	-0.009	-2.38E-03	-33.7	-46.3		291880

Run ID. 20261027_UoA_Section2_Prop_DeflectionEnvelope | Sheet No.
New data set - contains default parameters | Date:28-10-2026
Please modify / add | Checked :

(continued)

Stage No.16 Remove strut or anchor no.1 at elevation 43.00

Node no.	Y coord	Nett pressure	Wall disp.	Wall rotation	Shear force	Bending moment	Prop forces	EI of wall
		kN/m2	m	rad.	kN/m	kN.m/m	kN/m	kN.m2/m
24	33.60	84.12	-0.008	-2.30E-03	25.3	-44.9		291880
25	33.15	18.33	-0.007	-2.25E-03	48.4	-24.9		291880
26	32.70	-188.77	-0.006	-2.23E-03	10.0	-0.0		0
27	32.60	-4.15	-0.006	0	0.4	0.0		0
28	32.40	-3.24	-0.005	0	-0.4	0.0		0
29	30.60	1.29	-0.004	0	-2.1	0.0		0
30	28.80	0.29	-0.003	0	-0.7	0.0		0
31	25.60	-0.00	-0.002	0	-0.2	0.0		0
32	22.80	-0.02	-0.001	0	-0.3	0.0		0
33	20.00	0.22	-0.000	0	-0.0	0.0		---

At elev. 46.10 Prop force = 29.2 kN/m run
At elev. 41.10 Prop force = 114.9 kN/m run
At elev. 36.10 Prop force = 26.2 kN/m run

LEFT side

Node no.	Y coord	Water press.	Effective stresses Vertic -al	Active limit	Passive limit	Earth press.	Total earth press.	Adjusted soil modulus
		kN/m2	kN/m2	kN/m2	kN/m2	kN/m2	kN/m2	kN/m2
1	46.10	0.00	0.00	0.00	0.00	0.00	0.00	0.0
2	45.50	0.00	0.00	0.00	0.00	0.00	0.00	0.0
3	44.75	0.00	0.00	0.00	0.00	0.00	0.00	0.0
4	44.00	0.00	0.00	0.00	0.00	0.00	0.00	0.0
5	43.50	0.00	0.00	0.00	0.00	0.00	0.00	0.0
6	43.00	0.00	0.00	0.00	0.00	0.00	0.00	0.0
7	42.50	0.00	0.00	0.00	0.00	0.00	0.00	0.0
8	41.70	0.00	0.00	0.00	0.00	0.00	0.00	0.0
9	41.10	0.00	0.00	0.00	0.00	0.00	0.00	0.0
10	40.55	0.00	0.00	0.00	0.00	0.00	0.00	0.0
11	40.00	0.00	0.00	0.00	0.00	0.00	0.00	0.0
12	39.20	0.00	0.00	0.00	0.00	0.00	0.00	0.0
13	39.00	0.00	0.00	0.00	0.00	0.00	0.00	0.0
14	38.60	0.00	0.00	0.00	0.00	0.00	0.00	0.0
15	38.50	0.00	0.00	0.00	0.00	0.00	0.00	0.0
16	38.05	0.00	0.00	0.00	0.00	0.00	0.00	0.0
17	37.60	0.00	0.00	0.00	0.00	0.00	0.00	0.0
18	36.85	0.00	0.00	0.00	0.00	0.00	0.00	0.0
19	36.10	0.00	0.00	0.00	0.00	0.00	0.00	0.0
		0.00	0.00	0.00	0.00	0.00	0.00	149998
20	35.40	0.00	14.00	2.00	175.94	3.91	3.91	149998
21	35.10	0.00	20.00	2.86	251.35	2.36	2.36A	149998
		0.00	20.00	0.00	187.26	71.96	71.96	49999
22	34.70	3.60	24.00	0.00	210.79	95.63	99.23	49999
		3.60	24.00	0.00	640.74	231.55	235.15	149998
23	34.15	8.55	30.06	0.00	691.48	179.15	187.70	149998
24	33.60	13.50	36.12	0.00	742.24	125.35	138.85	149998
25	33.15	17.55	41.08	0.00	783.81	67.61	85.16	149998
26	32.70	21.60	46.04	0.00	825.40	20.82	42.42	149998
27	32.60	22.50	47.15	0.00	834.65	56.92	79.42	149998
28	32.40	24.30	49.36	0.00	853.16	57.55	81.85	149998
29	30.60	40.50	69.28	0.00	1020.10	61.62	102.12	149998
30	28.80	45.00	101.02	0.00	1286.00	70.68	115.68	149998
31	25.60	50.00	160.80	0.00	1786.84	91.47	141.47	149998
32	22.80	78.00	189.93	0.00	2030.88	101.35	179.35	149998
33	20.00	106.00	219.51	0.00	2278.71	111.55	217.55	149998

(continued)

Stage No.16 Remove strut or anchor no.1 at elevation 43.00

		RIGHT side						
			Effective stresses				Total	Adjusted
Node no.	Y coord	Water press.	Vertic -al	Active limit	Passive limit	Earth press.	earth press.	soil modulus
		kN/m2	kN/m2	kN/m2	kN/m2	kN/m2	kN/m2	kN/m2
1	46.10	0.00	0.00	0.00	0.00	0.00	0.00	0.0
2	45.50	0.00	0.00	0.00	0.00	0.00	0.00	0.0
		0.00	0.00	0.00	26.45	23.09	23.09	19999
3	44.75	0.00	17.66	0.00	93.78	15.37	15.37	19999
4	44.00	0.00	31.59	3.33	146.89	11.42	11.42	19999
5	43.50	0.00	40.72	6.16	181.68	9.13	9.13	19999
6	43.00	0.00	49.81	8.99	216.35	8.16	8.16A	19999
7	42.50	0.00	58.89	11.81	250.97	6.94	6.94A	19999
8	41.70	0.00	73.42	16.32	306.33	9.06	9.06A	19999
9	41.10	0.00	84.30	19.70	347.84	11.51	11.51A	19999
10	40.55	0.00	94.28	22.80	385.87	13.23	13.23A	19999
11	40.00	0.00	104.25	25.89	423.88	28.92	28.92	19999
12	39.20	0.00	118.74	30.39	479.10	32.99	32.99	19999
		0.00	118.74	27.65	537.57	30.89	30.89	19999
13	39.00	0.00	122.35	28.69	553.08	30.72	30.72	19999
14	38.60	0.00	129.59	30.75	584.09	32.58	32.58	19999
15	38.50	1.00	130.39	30.98	587.55	31.65	32.65	19999
16	38.05	5.50	134.02	32.01	603.10	31.53	37.03A	19999
17	37.60	10.00	137.64	33.04	618.62	30.78	40.78A	19999
18	36.85	17.50	143.65	34.76	644.41	35.19	52.69	19999
19	36.10	25.00	149.64	36.47	670.10	42.33	67.33	19999
20	35.40	32.00	155.22	38.05	694.00	42.62	74.62	19999
		32.00	155.22	24.52	982.18	32.63	64.63	49997
21	35.10	35.00	157.90	25.14	997.96	31.97	66.97	49997
22	34.70	39.00	161.48	25.95	1018.98	31.59	70.59	49997
		39.00	161.48	0.00	1792.53	17.03	56.03	149992
23	34.15	44.50	166.94	0.00	1838.26	12.65	57.15	149992
24	33.60	45.00	177.39	0.00	1925.81	9.73	54.73	149992
25	33.15	45.00	186.34	0.00	2000.83	21.83	66.83	149992
26	32.70	45.00	195.29	0.00	2075.81	186.19	231.19	149992
27	32.60	45.00	197.28	0.00	2092.47	38.56	83.56	149992
28	32.40	45.00	201.25	0.00	2125.78	40.09	85.09	149992
29	30.60	45.00	237.01	0.00	2425.38	55.82	100.82	149992
30	28.80	45.00	272.74	0.91	2724.73	70.39	115.39	149992
31	25.60	50.00	331.24	11.56	3214.83	91.47	141.47	149992
32	22.80	78.00	358.81	16.58	3445.84	101.37	179.37	149992
33	20.00	106.00	386.42	21.60	3677.12	111.33	217.33	149992

Legend: 12.34 a Soil pressure at active limit
123.45 p Soil pressure at passive limit
40.78 A Arching - soil pressure below active limit

Units: kN,m

Stage No.16 Remove prop no.1 at elev. 43.00

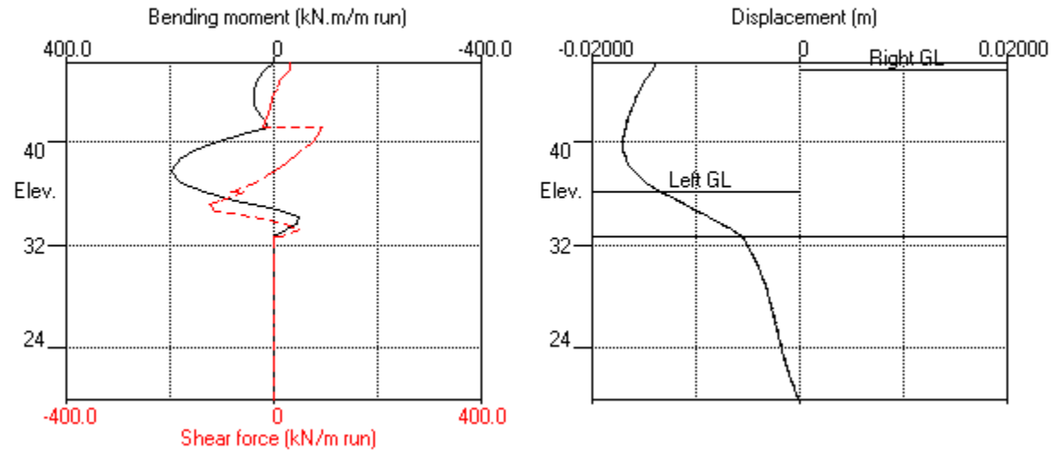

Stage No.16 Remove prop no.1 at elev. 43.00

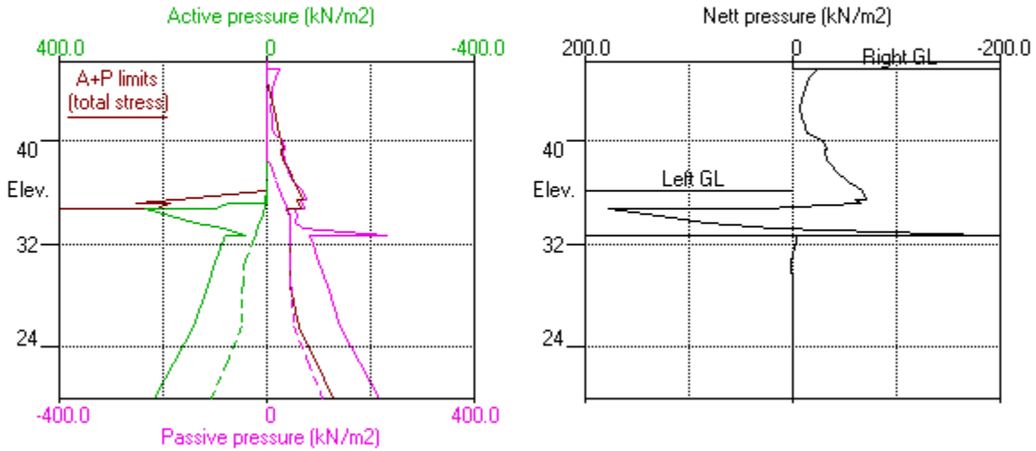

Units: kN,m

Stage No.17 Change EI of wall to 194590kN.m2/m run

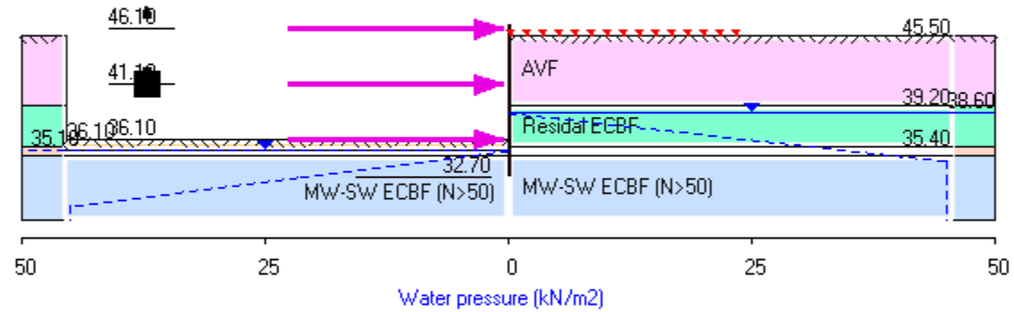

TONKIN + TAYLOR LTD | Sheet No.
Program: WALLAP Version 6.09 Revision A61.B78.R61 | Job No.
Licensed from GEOSOLVE | Made by :
Data filename/Run ID: 20261027_UoA_Section2_Prop_DeflectionEnvelope
New data set - contains default parameters | Date:28-10-2026
Please modify / add | Checked :

Units: kN,m

Stage No. 17 Change EI of wall to 194590 kN.m2/m run
Allow wall to relax with new modulus value

STABILITY ANALYSIS of Fully Embedded Wall according to Strength Factor method
Factor of safety on soil strength

Stage No.	Ground level Act.	Ground level Pass.	Prop Elev.	FoS for toe elev. = 32.70 Factor of Safety	Moment equilib. at elev.	Toe elev. for FoS = 1.500 Toe elev.	Wall Penetr -ation	Direction of failure
17	36.10	45.50	More than one prop. No FoS calc.					

BENDING MOMENT and DISPLACEMENT ANALYSIS of Fully Embedded Wall
Analysis options
2-D finite element model. Active limit arching modelled.
Soil deformations are elastic until the active or passive limit is reached
Open Tension Crack analysis - No
Length of wall perpendicular to section = 1000.00m
Rigid boundaries: Left side 40.00m from wall Rough
Right side 40.00m from wall Rough
Lower boundary at elevation 20.00m Rough
Soil-wall interface Smooth

*** Wall displacements reset to zero at stage 3

Node no.	Y coord	Nett pressure kN/m2	Wall disp. m	Wall rotation rad.	Shear force kN/m	Bending moment kN.m/m	Prop forces kN/m	EI of wall kN.m2/m
1	46.10	0.00	-0.014	8.37E-04	24.6	0.0	24.6	194590
2	45.50	0.00	-0.014	8.14E-04	24.6	15.4		194590
		-23.12	-0.014	8.14E-04	24.6	15.4		
3	44.75	-15.31	-0.015	7.36E-04	10.2	27.4		194590
4	44.00	-11.44	-0.015	6.32E-04	0.1	30.8		194590
5	43.50	-9.32	-0.016	5.62E-04	-5.0	29.7		194590
6	43.00	-8.53	-0.016	5.00E-04	-9.5	26.4		194590
7	42.50	-7.55	-0.016	4.52E-04	-13.5	20.9		194590
8	41.70	-9.86	-0.017	4.20E-04	-20.5	6.3		194590
9	41.10	-12.22	-0.017	4.43E-04	-27.1	-7.1	114.4	194590
		-12.22	-0.017	4.43E-04	87.3	-7.1		
10	40.55	-13.39	-0.017	4.20E-04	80.2	39.7		194590
11	40.00	-28.26	-0.017	2.73E-04	68.8	82.5		194590
12	39.20	-31.69	-0.017	-1.18E-04	44.8	129.1		194590
		-29.59	-0.017	-1.18E-04	44.8	129.1		
13	39.00	-28.96	-0.017	-2.43E-04	39.0	137.8		194590
14	38.60	-30.66	-0.017	-5.16E-04	27.0	151.5		194590
15	38.50	-30.59	-0.017	-5.88E-04	24.0	154.1		194590
16	38.05	-34.91	-0.017	-9.25E-04	9.2	161.8		194590
17	37.60	-38.79	-0.016	-1.27E-03	-7.3	162.8		194590
18	36.85	-51.14	-0.015	-1.81E-03	-41.1	144.9		194590
19	36.10	-66.45	-0.014	-2.24E-03	-85.2	99.5	45.5	194590
		-66.45	-0.014	-2.24E-03	-39.7	99.5		
20	35.40	-66.68	-0.012	-2.48E-03	-86.3	52.0		194590
		-55.71	-0.012	-2.48E-03	-86.3	52.0		
21	35.10	-66.88	-0.011	-2.52E-03	-104.7	22.3		194590
		3.99	-0.011	-2.52E-03	-104.7	22.3		
22	34.70	26.34	-0.010	-2.52E-03	-98.6	-20.9		194590
		172.21	-0.010	-2.52E-03	-98.6	-20.9		

Run ID. 20261027_UoA_Section2_Prop_DeflectionEnvelope | Sheet No.
New data set - contains default parameters | Date:28-10-2026
Please modify / add | Checked :

(continued)

Stage No.17 Change EI of wall to 194590 kN.m2/m run
Allow wall to relax with new modulus value

Node no.	Y coord	Nett pressure	Wall disp.	Wall rotation	Shear force	Bending moment	Prop forces	EI of wall
		kN/m2	m	rad.	kN/m	kN.m/m	kN/m	kN.m2/m
23	34.15	117.05	-0.009	-2.41E-03	-19.1	-51.6		194590
24	33.60	70.83	-0.007	-2.28E-03	32.6	-46.0		194590
25	33.15	9.90	-0.006	-2.20E-03	50.7	-24.8		194590
26	32.70	-190.49	-0.005	-2.17E-03	10.1	-0.0		0
27	32.60	-4.15	-0.005	0	0.4	0.0		0
28	32.40	-3.24	-0.005	0	-0.4	0.0		0
29	30.60	1.29	-0.004	0	-2.1	0.0		0
30	28.80	0.29	-0.003	0	-0.7	0.0		0
31	25.60	-0.00	-0.002	0	-0.2	0.0		0
32	22.80	-0.02	-0.001	0	-0.3	0.0		0
33	20.00	0.22	-0.000	0	-0.0	0.0		---

At elev. 46.10 Prop force = 24.6 kN/m run
At elev. 41.10 Prop force = 114.4 kN/m run
At elev. 36.10 Prop force = 45.5 kN/m run

		LEFT side						
		Effective stresses					Total	Adjusted
Node no.	Y coord	Water press.	Vertic -al	Active limit	Passive limit	Earth press.	earth press.	soil modulus
		kN/m2	kN/m2	kN/m2	kN/m2	kN/m2	kN/m2	kN/m2
1	46.10	0.00	0.00	0.00	0.00	0.00	0.00	0.0
2	45.50	0.00	0.00	0.00	0.00	0.00	0.00	0.0
3	44.75	0.00	0.00	0.00	0.00	0.00	0.00	0.0
4	44.00	0.00	0.00	0.00	0.00	0.00	0.00	0.0
5	43.50	0.00	0.00	0.00	0.00	0.00	0.00	0.0
6	43.00	0.00	0.00	0.00	0.00	0.00	0.00	0.0
7	42.50	0.00	0.00	0.00	0.00	0.00	0.00	0.0
8	41.70	0.00	0.00	0.00	0.00	0.00	0.00	0.0
9	41.10	0.00	0.00	0.00	0.00	0.00	0.00	0.0
10	40.55	0.00	0.00	0.00	0.00	0.00	0.00	0.0
11	40.00	0.00	0.00	0.00	0.00	0.00	0.00	0.0
12	39.20	0.00	0.00	0.00	0.00	0.00	0.00	0.0
13	39.00	0.00	0.00	0.00	0.00	0.00	0.00	0.0
14	38.60	0.00	0.00	0.00	0.00	0.00	0.00	0.0
15	38.50	0.00	0.00	0.00	0.00	0.00	0.00	0.0
16	38.05	0.00	0.00	0.00	0.00	0.00	0.00	0.0
17	37.60	0.00	0.00	0.00	0.00	0.00	0.00	0.0
18	36.85	0.00	0.00	0.00	0.00	0.00	0.00	0.0
19	36.10	0.00	0.00	0.00	0.00	0.00	0.00	0.0
		0.00	0.00	0.00	0.00	0.00	0.00	149998
20	35.40	0.00	14.00	2.00	175.94	7.29	7.29	149998
21	35.10	0.00	20.00	2.86	251.35	0.00	0.00A	149998
		0.00	20.00	0.00	187.26	70.87	70.87	49999
22	34.70	3.60	24.00	0.00	210.79	94.24	97.84	49999
		3.60	24.00	0.00	640.74	227.38	230.98	149998
23	34.15	8.55	30.06	0.00	691.48	172.20	180.75	149998
24	33.60	13.50	36.12	0.00	742.24	118.68	132.18	149998
25	33.15	17.55	41.08	0.00	783.81	63.43	80.98	149998
26	32.70	21.60	46.04	0.00	825.40	20.00	41.60	149998
27	32.60	22.50	47.15	0.00	834.65	56.97	79.47	149998
28	32.40	24.30	49.36	0.00	853.16	57.61	81.91	149998
29	30.60	40.50	69.28	0.00	1020.10	61.66	102.16	149998
30	28.80	45.00	101.02	0.00	1286.00	70.71	115.71	149998
31	25.60	50.00	160.80	0.00	1786.84	91.49	141.49	149998
32	22.80	78.00	189.93	0.00	2030.88	101.36	179.36	149998
33	20.00	106.00	219.51	0.00	2278.71	111.56	217.56	149998

(continued)

Stage No.17 Change EI of wall to 194590 kN.m2/m run
Allow wall to relax with new modulus value

RIGHT side

Node no.	Y coord	Effective stresses: Water press.	Vertic -al	Active limit	Passive limit	Earth press.	Total earth press.	Adjusted soil modulus
		kN/m2	kN/m2	kN/m2	kN/m2	kN/m2	kN/m2	kN/m2
1	46.10	0.00	0.00	0.00	0.00	0.00	0.00	0.0
2	45.50	0.00	0.00	0.00	0.00	0.00	0.00	0.0
		0.00	0.00	0.00	26.45	23.12	23.12	19999
3	44.75	0.00	17.66	0.00	93.78	15.31	15.31	19999
4	44.00	0.00	31.59	3.33	146.89	11.44	11.44	19999
5	43.50	0.00	40.72	6.16	181.68	9.32	9.32	19999
6	43.00	0.00	49.81	8.99	216.35	8.53	8.53A	19999
7	42.50	0.00	58.89	11.81	250.97	7.55	7.55A	19999
8	41.70	0.00	73.42	16.32	306.33	9.86	9.86A	19999
9	41.10	0.00	84.30	19.70	347.84	12.22	12.22A	19999
10	40.55	0.00	94.28	22.80	385.87	13.39	13.39A	19999
11	40.00	0.00	104.25	25.89	423.88	28.26	28.26	19999
12	39.20	0.00	118.74	30.39	479.10	31.69	31.69	19999
		0.00	118.74	27.65	537.57	29.59	29.59	19999
13	39.00	0.00	122.35	28.69	553.08	28.96	28.96	19999
14	38.60	0.00	129.59	30.75	584.09	30.66	30.66A	19999
15	38.50	1.00	130.39	30.98	587.55	29.59	30.59A	19999
16	38.05	5.50	134.02	32.01	603.10	29.41	34.91A	19999
17	37.60	10.00	137.64	33.04	618.62	28.79	38.79A	19999
18	36.85	17.50	143.65	34.76	644.41	33.64	51.14A	19999
19	36.10	25.00	149.64	36.47	670.10	41.45	66.45	19999
20	35.40	32.00	155.22	38.05	694.00	41.97	73.97	19999
		32.00	155.22	24.52	982.18	31.00	63.00	49997
21	35.10	35.00	157.90	25.14	997.96	31.88	66.88	49997
22	34.70	39.00	161.48	25.95	1018.98	32.51	71.51	49997
		39.00	161.48	0.00	1792.53	19.78	58.78	149992
23	34.15	44.50	166.94	0.00	1838.26	19.20	63.70	149992
24	33.60	45.00	177.39	0.00	1925.81	16.35	61.35	149992
25	33.15	45.00	186.34	0.00	2000.83	26.08	71.08	149992
26	32.70	45.00	195.29	0.00	2075.81	187.09	232.09	149992
27	32.60	45.00	197.28	0.00	2092.47	38.61	83.61	149992
28	32.40	45.00	201.25	0.00	2125.78	40.15	85.15	149992
29	30.60	45.00	237.01	0.00	2425.38	55.87	100.87	149992
30	28.80	45.00	272.74	0.91	2724.73	70.42	115.42	149992
31	25.60	50.00	331.24	11.56	3214.83	91.49	141.49	149992
32	22.80	78.00	358.81	16.58	3445.84	101.38	179.38	149992
33	20.00	106.00	386.42	21.60	3677.12	111.34	217.34	149992

Legend: 12.34 a Soil pressure at active limit
123.45 p Soil pressure at passive limit
51.14 A Arching - soil pressure below active limit

Units: kN,m

Stage No.17 Change EI of wall to 194590kN.m2/m run

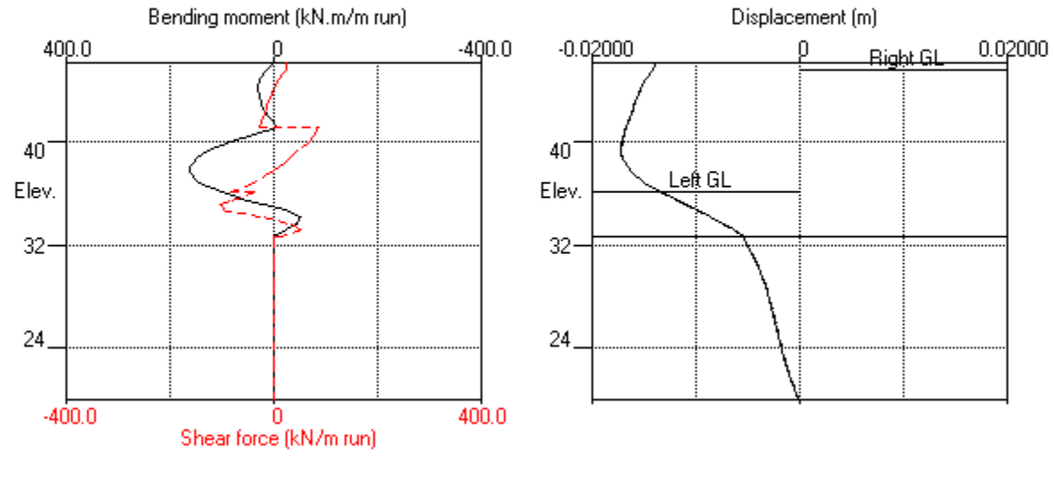

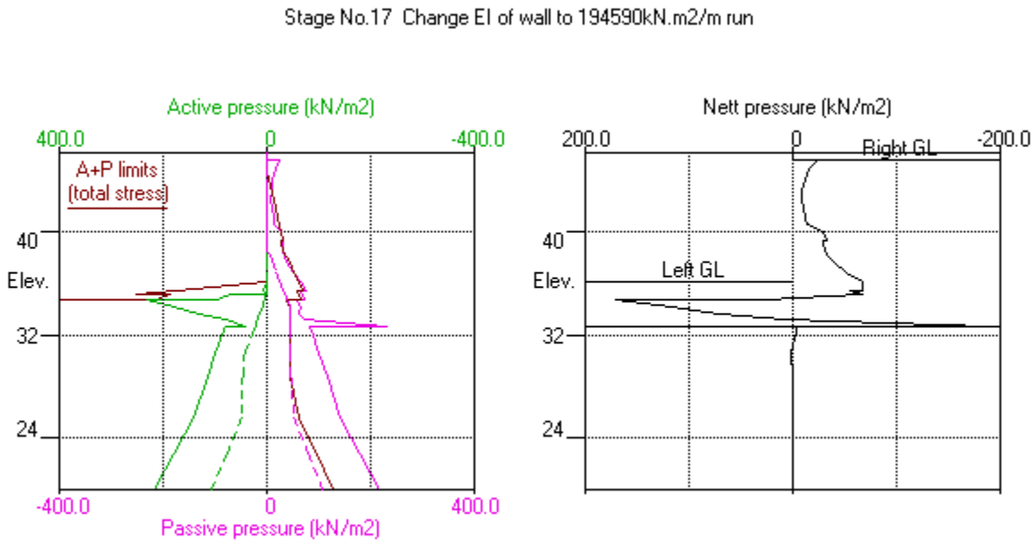

TONKIN + TAYLOR LTD | Sheet No.
Program: WALLAP Version 6.09 Revision A61.B78.R61 | Job No.
Licensed from GEOSOLVE | Made by :
Data filename/Run ID: 20261027_UoA_Section2_Prop_DeflectionEnvelope
New data set - contains default parameters | Date:28-10-2026
Please modify / add | Checked :

Units: kN,m

Summary of results

STABILITY ANALYSIS of Fully Embedded Wall according to Strength Factor method
Factor of safety on soil strength

Stage No.	Ground level Act.	Pass.	Prop Elev.	FoS for toe elev. = 32.70 Factor of Safety	Moment equilib. at elev.	Toe elev. for FoS = 1.500 Toe elev.	Wall Penetr -ation	Direction of failure
1	45.50	45.50	Cant.	Conditions not suitable for FoS calc.				
2	45.50	45.50	Cant.	Conditions not suitable for FoS calc.				
3	45.50	45.50		No analysis at this stage				
4	45.50	45.50		No analysis at this stage				
5	45.50	42.50	Cant.	1.622	33.59	33.49	9.01	R to L
6	42.50	45.50		No analysis at this stage				
7	45.50	38.50	43.00	2.546	n/a	34.39	4.11	R to L
8	38.50	45.50		No analysis at this stage				

All remaining stages have more than one prop - FoS calculation n/a

Units: kN,m

Summary of results

BENDING MOMENT and DISPLACEMENT ANALYSIS of Fully Embedded Wall

Analysis options

2-D finite element model. Active limit arching modelled.
Soil deformations are elastic until the active or passive limit is reached
Open Tension Crack analysis - No

Length of wall perpendicular to section = 1000.00m
Rigid boundaries: Left side 40.00m from wall Rough
Right side 40.00m from wall Rough
Lower boundary at elevation 20.00m Rough
Soil-wall interface Smooth

Bending moment, shear force and displacement envelopes

Node no.	Y coord	Displacement maximum	Displacement minimum	Bending moment maximum	Bending moment minimum	Shear force maximum	Shear force minimum
	m	m	kN.m/m	kN.m/m	kN/m	kN/m	
1	46.10	0.000	-0.016	0.0	-0.0	29.2	0.0
2	45.50	0.000	-0.015	17.5	-0.0	29.2	0.0
3	44.75	0.000	-0.015	32.1	-6.6	14.8	-13.7
4	44.00	0.000	-0.015	38.1	-22.0	4.7	-25.0
5	43.50	0.000	-0.016	38.9	-36.5	0.5	-31.9
6	43.00	0.000	-0.016	37.3	-54.3	83.1	-38.3
7	42.50	0.000	-0.016	33.7	-22.9	79.0	-13.5
8	41.70	0.000	-0.017	55.7	-19.2	73.1	-20.5
9	41.10	0.000	-0.017	97.7	-17.6	93.9	-27.1
10	40.55	0.000	-0.017	132.4	-11.9	87.1	0.0
11	40.00	0.000	-0.017	161.7	-3.6	75.5	0.0
12	39.20	0.000	-0.017	183.5	0.0	50.7	-5.3
13	39.00	0.000	-0.017	185.6	0.0	96.2	-14.5
14	38.60	0.000	-0.017	197.7	0.0	76.8	-20.0
15	38.50	0.000	-0.017	200.0	0.0	71.8	-25.4
16	38.05	0.000	-0.017	205.8	0.0	48.3	-37.3
17	37.60	0.000	-0.016	212.2	0.0	23.4	-48.1
18	36.85	0.000	-0.015	211.5	0.0	0.0	-64.5
19	36.10	0.000	-0.014	175.9	0.0	0.0	-90.4
20	35.40	0.000	-0.013	106.4	-15.6	0.0	-129.4
21	35.10	0.000	-0.012	65.5	-36.9	0.0	-148.5
22	34.70	0.000	-0.011	7.3	-65.6	0.0	-140.9
23	34.15	0.000	-0.009	0.0	-79.2	7.0	-46.6
24	33.60	0.000	-0.008	0.0	-59.8	54.2	0.0
25	33.15	0.000	-0.007	0.0	-28.2	65.7	0.0
26	32.70	0.000	-0.006	0.0	-0.0	11.4	0.0
27	32.60	0.000	-0.006	0.0	0.0	0.4	-0.0
28	32.40	0.000	-0.006	0.0	0.0	0.0	-0.4
29	30.60	0.000	-0.005	0.0	0.0	0.0	-2.1
30	28.80	0.000	-0.004	0.0	0.0	0.0	-0.8
31	25.60	0.000	-0.003	0.0	0.0	0.0	-0.4
32	22.80	0.000	-0.002	0.0	0.0	0.0	-0.3
33	20.00	0.000	-0.000	0.0	0.0	0.0	-0.0

Summary of results (continued)

Maximum and minimum bending moment and shear force at each stage

Stage no.	Bending moment maximum kN.m/m	Bending moment elev.	Bending moment minimum kN.m/m	Bending moment elev.	Shear force maximum kN/m	Shear force elev.	Shear force minimum kN/m	Shear force elev.
1	1.6	37.60	-0.4	34.15	0.4	33.15	-1.0	35.40
2	2.6	39.00	-3.1	34.15	2.4	33.15	-2.7	35.40
3	No calculation at this stage							
4	No calculation at this stage							
5	28.1	37.60	-49.9	34.15	39.2	33.15	-45.1	35.40
6	No calculation at this stage							
7	184.4	39.00	-79.2	34.15	83.1	43.00	-92.8	35.40
8	No calculation at this stage							
9	209.4	37.60	-54.3	43.00	96.2	39.00	-146.7	35.10
10	212.2	37.60	-54.0	43.00	95.2	39.00	-148.5	35.10
11	188.4	37.60	-50.4	43.00	71.8	43.00	-133.4	35.10
12	No calculation at this stage							
13	No calculation at this stage							
14	205.8	38.05	-54.3	43.00	84.2	41.10	-125.5	35.10
15	No calculation at this stage							
16	196.4	37.60	-46.3	34.15	93.9	41.10	-125.6	35.10
17	162.8	37.60	-51.6	34.15	87.3	41.10	-104.7	35.10

Maximum and minimum displacement at each stage

Stage no.	Displacement maximum m	Displacement elev.	Displacement minimum m	Displacement elev.	Stage description
1	0.000	46.10	-0.000	39.00	Apply surcharge no.1 at elev. 45.50
2	0.000	46.10	-0.001	46.10	Apply surcharge no.2 at elev. 45.50
3	Wall displacements reset to zero Change EI of wall to 291880kN.m2/m run				
4	No calculation at this stage				Apply water pressure profile no.1
5	0.000	46.10	-0.016	46.10	Excav. to elev. 42.50 on LEFT side
6	No calculation at this stage				Install prop no.1 at elev. 43.00
7	0.000	46.10	-0.016	40.55	Excav. to elev. 38.50 on LEFT side
8	No calculation at this stage				Install prop no.2 at elev. 39.00
9	0.000	46.10	-0.017	39.20	Excav. to elev. 35.10 on LEFT side
10	0.000	46.10	-0.017	39.20	Fill to elev. 36.10 on LEFT side
11	0.000	46.10	-0.017	40.00	Apply water pressure profile no.2
12	No calculation at this stage				Install prop no.4 at elev. 36.10
13	No calculation at this stage				Install prop no.3 at elev. 41.10
14	0.000	46.10	-0.017	39.20	Remove prop no.2 at elev. 39.00
15	No calculation at this stage				Install prop no.5 at elev. 46.10
16	0.000	46.10	-0.017	40.00	Remove prop no.1 at elev. 43.00
17	0.000	46.10	-0.017	39.20	Change EI of wall to 194590kN.m2/m run

Run ID. 20261027_UoA_Section2_Prop_DeflectionEnvelope | Sheet No.
New data set - contains default parameters | Date:28-10-2026
Please modify / add | Checked :

Summary of results (continued)

Prop forces at each stage (horizontal components)

Stage no.	Strut no. 1 at elev. 43.00 kN/m run	Strut no. 1 kN/prop	Strut no. 2 at elev. 39.00 kN/m run	Strut no. 2 kN/prop	Strut no. 3 at elev. 41.10 kN/m run	Strut no. 3 kN/prop
7	112.69	540.89	---	---	---	---
9	113.95	546.94	110.74	531.54	---	---
10	114.00	547.19	108.24	519.57	---	---
11	107.39	515.49	66.04	316.98	---	---
14	104.55	501.85	---	---	38.68	38.68
16	---	---	---	---	114.94	114.94
17	---	---	---	---	114.40	114.40

Stage no.	Strut no. 4 at elev. 36.10 kN/m run	Strut no. 4 kN/prop	Strut no. 5 at elev. 46.10 kN/m run	Strut no. 5 kN/prop
14	31.18	31.18	---	---
16	26.15	26.15	29.19	29.19
17	45.45	45.45	24.59	24.59

TONKIN + TAYLOR LTD | Sheet No.
Program: WALLAP Version 6.09 Revision A61.B78.R61 | Job No.
Licensed from GEOSOLVE | Made by :
Data filename/Run ID: 20261027_UoA_Section2_Prop_DeflectionEnvelope
New data set - contains default parameters | Date:28-10-2026
Please modify / add | Checked :

Units: kN,m

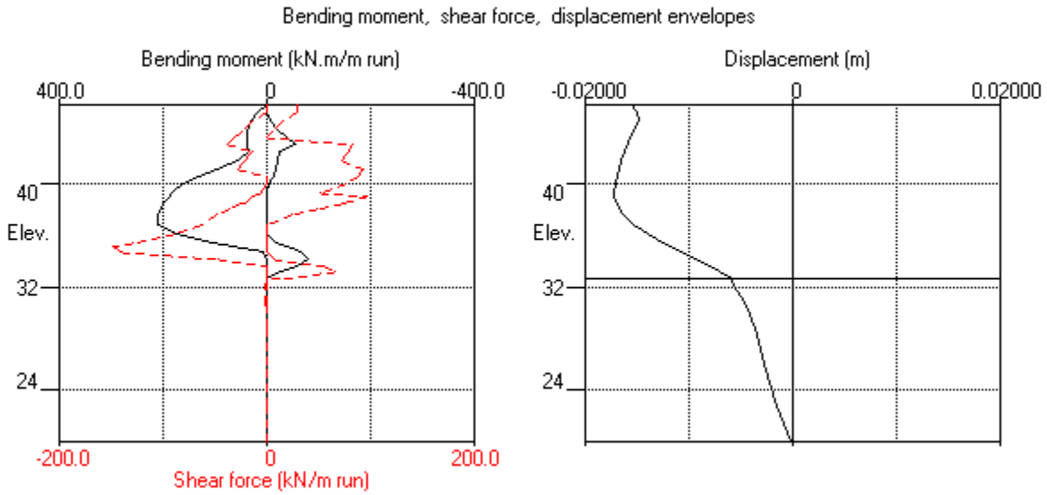

TONKIN + TAYLOR LTD | Sheet No.
Program: WALLAP Version 6.09 Revision A61.B78.R61 | Job No.
Licensed from GEOSOLVE | Made by :
Data filename/Run ID: 20261027_UoA_Section3_Anc_DeflectionEnvelope
New data set - contains default parameters | Date:28-10-2026
Please modify / add | Checked :

Units: kN,m

INPUT DATA

SOIL PROFILE

Stratum no.	Elevation of top of stratum	Soil types Left side		Right side	
1	42.60	6	AVF	6	AVF
2	39.00	2	Residal ECBF	2	Residal ECBF
3	34.50	3	HW ECBF	3	HW ECBF
4	30.50	4	MW-SW ECBF (N>50)	4	MW-SW ECBF (N>50)

SOIL PROPERTIES

No.	Soil type -- Description	Bulk density kN/m3	Young's Modulus Eh,kN/m2	At rest coeff. Ko	Consol state.	Active limit Ka	Passive limit Kp	Cohesion kN/m2
	(Datum elev.)		(dEh/dy)	(dKo/dy)	(Nu)	(Kac)	(Kpc)	(dc/dy)
1	Fill	17.00	10000	0.530	OC	0.311	3.812	2.000d
				(0.300)		(1.297)	(5.289)	
2	Residal ECBF	18.00	20000	0.500	OC	0.285	4.288	5.000d
				(0.300)		(1.238)	(5.694)	
3	HW ECBF	19.00	50000	0.430	OC	0.229	5.879	10.00d
				(0.250)		(1.101)	(6.968)	
4	MW-SW ECBF (N>50)	20.00	150000	0.360	OC	0.182	8.378	50.00d
				(0.250)		(0.975)	(8.793)	
5	Structural fill	20.00	150000	0.290	OC	0.143	12.57	0.0d
				(0.200)		(0.857)	(11.567)	
6	AVF	18.00	20000	0.530	OC	0.311	3.812	5.000d
				(0.300)		(1.297)	(5.289)	

Additional soil parameters associated with Ka and Kp

No.	Soil type ------- Description	--- parameters for Ka --- Soil friction angle	Wall adhesion coeff.	Back-fill angle	--- parameters for Kp --- Soil friction angle	Wall adhesion coeff.	Back-fill angle
1	Fill	28.00	0.639	0.00	28.00	0.469	0.00
2	Residal ECBF	30.00	0.634	0.00	30.00	0.464	0.00
3	HW ECBF	35.00	0.619	0.00	35.00	0.450	0.00
4	MW-SW ECBF (N>50)	40.00	0.602	0.00	40.00	0.434	0.00
5	Structural fill	45.00	0.581	0.00	45.00	0.414	0.00
6	AVF	28.00	0.639	0.00	28.00	0.469	0.00

GROUND WATER CONDITIONS

Density of water = 10.00 kN/m3
Initial water pressure profile = Profile number 5

Automatic water pressure balancing at toe of wall : No

Water press. profile no.	Left side Point no.	Elev. m	Piezo elev. m	Water press. kN/m2	Right side Point no.	Elev. m	Piezo elev. m	Water press. kN/m2
1	1	35.10	35.10	0.0	1	41.00	41.00	0.0
	2	30.10	34.60	45.0	2	36.50	41.00	45.0
	3	26.10	30.60	45.0	3	26.00	30.50	45.0
2	1	39.60	39.60	0.0	1	41.00	41.00	0.0
	2	35.10	39.60	45.0	2	36.50	41.00	45.0
	3	26.00	30.50	45.0	3	26.00	30.50	45.0
3	1	35.10	35.10	0.0	1	37.60	37.60	0.0
4	Not defined							
5	1	41.00	41.00	0.0	1	41.00	41.00	0.0
	2	36.50	41.00	45.0	2	36.50	41.00	45.0
	3	26.00	30.50	45.0	3	26.00	30.50	45.0

WALL PROPERTIES

Type of structure = Fully Embedded Wall
Elevation of toe of wall = 28.50
Maximum finite element length = 1.00 m
Youngs modulus of wall E = 10000 kN/m2
Moment of inertia of wall I = 1.0000 m4/m run
E.I = 10000 kN.m2/m run
Yield Moment of wall = Not defined

STRUTS and ANCHORS

Prop no.	Elev.	Prop spacing m	Cross-section area sq.m	Youngs modulus kN/m2	Free length m	Inclin-ation (degs)	Pre-stress /prop kN	Strut or Anchor	Allow tension ?	L/R
1	40.70	3.60	0.001433	2.000E+08	17.00	45.00	750.0	Anchor	n/a	L
2	Not defined									
3	41.10	1.00	0.250000	3.000E+07	20.00	0.00	0	Strut	No	L
4	36.10	1.00	0.250000	3.000E+07	20.00	0.00	0	Strut	No	L

SURCHARGE LOADS

Surcharge no.	Elev.	Distance from wall	Length parallel to wall	Width perpend. to wall	Surcharge(kN/m2) Near edge	Far edge	Cat.	Soil type	Part fact.	Short Q reduc. fact.
1	42.00	-7.50(R)	15.00	15.00	20.00	=	--	--	--	--
2	42.60	-0.10(R)	15.00	7.40	5.00	=	--	--	--	--

Note: L = Left side, R = Right side

CONSTRUCTION STAGES

Construction stage no.	Stage description
1	Apply surcharge no.1 at elevation 42.00
2	Apply surcharge no.2 at elevation 42.60
3	Change EI of wall to 187670 kN.m2/m run Reset wall displacements to zero at this stage
4	Apply water pressure profile no.2
5	Excavate to elevation 40.10 on LEFT side
6	Install strut or anchor no.1 at elevation 40.70
7	Apply water pressure profile no.1 No analysis at this stage
8	Excavate to elevation 35.10 on LEFT side
9	Fill to elevation 36.10 on LEFT side with soil type 5
10	Apply water pressure profile no.3 No analysis at this stage
11	Install strut or anchor no.4 at elevation 36.10
12	Install strut or anchor no.3 at elevation 41.10
13	Remove strut or anchor no.1 at elevation 40.70
14	Change EI of wall to 125120 kN.m2/m run Allow wall to relax with new modulus value

FACTORS OF SAFETY and ANALYSIS OPTIONS

Stability analysis:
Method of analysis - Strength Factor method
Factor on soil strength for calculating wall depth = 1.50

Parameters for undrained strata:
Minimum equivalent fluid density = 5.00 kN/m3
Maximum depth of water filled tension crack = 0.00 m

Bending moment and displacement calculation:
Method - 2-D finite element model
Open Tension Crack analysis? - No
Active limit arching modelled? - Yes
Non-linear Modulus Parameter (L) = 14.10 m

Boundary conditions:
Length of wall (normal to plane of analysis) = 1000.00 m

Width of excavation/fill on Left side of wall = 40.00 m
Width of excavation/fill on Right side of wall = 40.00 m

Distance to rigid boundary on Left side = 40.00 m
Distance to rigid boundary on Right side = 40.00 m
Elevation of rigid lower boundary = 20.00

Lower rigid boundary at elevation 20.00 - Rough
Rigid boundary on Left side - Rough
Rigid boundary on Right side - Rough
Soil-wall interface - Smooth

OUTPUT OPTIONS

Stage no.	Stage description	Displacement Bending mom. Shear force	Active, Passive pressures	Graph. output
1	Apply surcharge no.1 at elev. 42.00	Yes	Yes	Yes
2	Apply surcharge no.2 at elev. 42.60	Yes	Yes	Yes
3	Change EI of wall to 187670kN.m2/m run	No	No	No
4	Apply water pressure profile no.2	No	No	No
5	Excav. to elev. 40.10 on LEFT side	Yes	Yes	Yes
6	Install prop no.1 at elev. 40.70	Yes	Yes	Yes
7	Apply water pressure profile no.1	No	No	No
8	Excav. to elev. 35.10 on LEFT side	Yes	Yes	Yes
9	Fill to elev. 36.10 on LEFT side	No	No	No
10	Apply water pressure profile no.3	No	No	No
11	Install prop no.4 at elev. 36.10	Yes	Yes	Yes
12	Install prop no.3 at elev. 41.10	Yes	Yes	Yes
13	Remove prop no.1 at elev. 40.70	Yes	Yes	Yes
14	Change EI of wall to 125120kN.m2/m run	No	No	No
*	Summary output	Yes	-	Yes

Program WALLAP - Copyright (C) 2026 by DL Borin, distributed by GEOSOLVE
150 St. Alphonsus Road, London SW4 7BW, UK www.geosolve.co.uk

Units: kN,m

Stage No.5 Excav. to elev. 40.10 on LEFT side

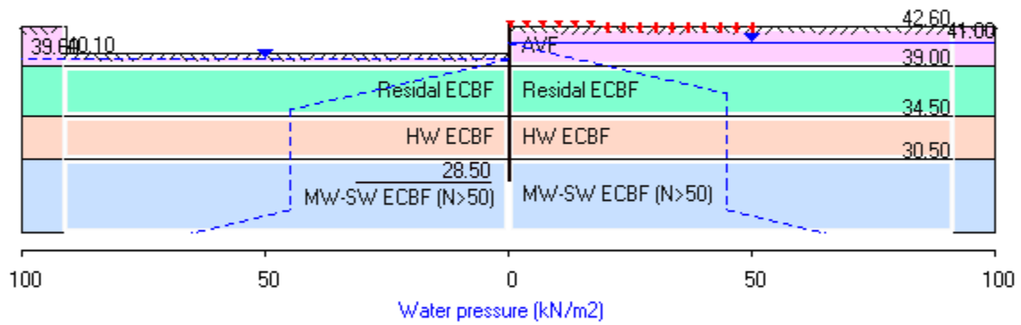

TONKIN + TAYLOR LTD | Sheet No.
Program: WALLAP Version 6.09 Revision A61.B78.R61 | Job No.
Licensed from GEOSOLVE | Made by :
Data filename/Run ID: 20261027_UoA_Section3_Anc_DeflectionEnvelope
New data set - contains default parameters | Date:28-10-2026
Please modify / add | Checked :

Units: kN,m

Stage No. 5 Excavate to elevation 40.10 on LEFT side

STABILITY ANALYSIS of Fully Embedded Wall according to Strength Factor method

Factor of safety on soil strength

Stage No.	Ground level Act.	Pass.	Prop Elev.	FoS for toe elev. = 28.50 Factor of Safety	Moment equilib. at elev.	Toe elev. for FoS = 1.500 Toe elev.	Wall Penetr -ation	Direction of failure
5	42.60	40.10	Cant.	3.447	29.66	36.77	3.33	R to L

BENDING MOMENT and DISPLACEMENT ANALYSIS of Fully Embedded Wall

Analysis options

2-D finite element model. Active limit arching modelled.
Soil deformations are elastic until the active or passive limit is reached
Open Tension Crack analysis - No

Length of wall perpendicular to section = 1000.00m
Rigid boundaries: Left side 40.00m from wall Rough
Right side 40.00m from wall Rough
Lower boundary at elevation 20.00m Rough
Soil-wall interface Smooth

*** Wall displacements reset to zero at stage 3

Warnings concerning changes to wall stiffness
have been ignored. Please review the calculated bending moments
for unexpected values and read the Help Topic

Node no.	Y coord	Nett pressure	Wall disp.	Wall rotation	Shear force	Bending moment	Prop forces	EI of wall
		kN/m2	m	rad.	kN/m	kN.m/m	kN/m	kN.m2/m
1	42.60	-0.00	-0.012	-1.16E-03	0.0	-0.0		187670
2	42.00	0.00	-0.011	-1.16E-03	-0.0	-0.5		187670
3	41.10	-3.32	-0.010	-1.15E-03	-1.5	-1.7		187670
4	41.00	-3.88	-0.010	-1.15E-03	-1.9	-1.9		187670
5	40.70	-7.65	-0.010	-1.15E-03	-3.6	-2.7		187670
6	40.10	-15.16	-0.009	-1.13E-03	-10.4	-6.8		187670
		11.28	-0.009	-1.13E-03	-10.4	-6.8		
7	39.60	9.49	-0.009	-1.11E-03	-5.2	-10.7		187670
8	39.00	6.17	-0.008	-1.07E-03	-0.5	-12.1		187670
9	38.30	1.97	-0.007	-1.03E-03	2.3	-11.0		187670
10	37.60	-1.77	-0.007	-9.96E-04	2.4	-8.9		187670
11	36.85	-5.20	-0.006	-9.63E-04	-0.2	-7.6		187670
12	36.10	-6.75	-0.005	-9.29E-04	-4.7	-9.0		187670
13	35.10	-4.70	-0.004	-8.60E-04	-10.4	-16.2		187670

14	34.50	-6.34	-0.004	-7.97E-04	-13.8	-23.3	187670
		21.39	-0.004	-7.97E-04	-13.8	-23.3	
15	33.75	11.99	-0.003	-6.96E-04	-1.2	-27.6	187670
16	33.00	3.06	-0.003	-5.92E-04	4.4	-25.2	187670
17	32.00	-1.93	-0.002	-4.74E-04	5.0	-19.2	187670
18	31.25	-5.84	-0.002	-4.03E-04	2.1	-16.1	187670
19	30.50	-5.77	-0.002	-3.39E-04	-2.3	-16.1	187670
		16.28	-0.002	-3.39E-04	-2.3	-16.1	
20	29.50	4.45	-0.001	-2.69E-04	8.1	-10.3	187670
21	28.50	-18.71	-0.001	-2.42E-04	0.9	-0.0	0
22	28.40	-0.00	-0.001	0	-0.0	0.0	0
23	28.20	-0.05	-0.001	0	-0.0	0.0	0

(continued)

Stage No.5 Excavate to elevation 40.10 on LEFT side

Node no.	Y coord	Nett pressure	Wall disp.	Wall rotation	Shear force	Bending moment	Prop forces	EI of wall
		kN/m2	m	rad.	kN/m	kN.m/m	kN/m	kN.m2/m
24	26.10	-0.01	-0.001	0	-0.1	0.0		0
25	24.00	-0.08	-0.001	0	-0.2	0.0		0
26	20.00	0.16	-0.000	0	-0.0	0.0		---

LEFT side

Node no.	Y coord	Effective stresses: Water press.	Vertic -al	Active limit	Passive limit	Earth press.	Total earth press.	Adjusted soil modulus
		kN/m2	kN/m2	kN/m2	kN/m2	kN/m2	kN/m2	kN/m2
1	42.60	0.00	0.00	0.00	0.00	0.00	0.00	0.0
2	42.00	0.00	0.00	0.00	0.00	0.00	0.00	0.0
3	41.10	0.00	0.00	0.00	0.00	0.00	0.00	0.0
4	41.00	0.00	0.00	0.00	0.00	0.00	0.00	0.0
5	40.70	0.00	0.00	0.00	0.00	0.00	0.00	0.0
6	40.10	0.00	0.00	0.00	0.00	0.00	0.00	0.0
		0.00	0.00	0.00	26.45	26.45	26.45p	19999
7	39.60	0.00	9.00	0.00	60.76	30.91	30.91	19999
8	39.00	6.00	13.80	0.00	79.06	30.36	36.36	19999
		6.00	13.80	0.00	87.64	29.01	35.01	19999
9	38.30	13.00	19.40	0.00	111.66	29.22	42.22	19999
10	37.60	20.00	25.00	0.94	135.68	29.80	49.80	19999
11	36.85	27.50	31.01	2.65	161.43	30.85	58.35	19999
12	36.10	35.00	37.02	4.36	187.20	32.05	67.05	19999
13	35.10	45.00	45.04	6.65	221.57	34.85	79.85	19999
14	34.50	45.00	55.85	9.73	267.94	39.14	84.14	19999
		45.00	55.85	1.77	398.02	48.38	93.38	49998
15	33.75	45.00	70.12	5.04	481.92	49.52	94.52	49998
16	33.00	45.00	84.40	8.31	565.87	51.10	96.10	49998
17	32.00	45.00	103.45	12.67	677.85	56.71	101.71	49998
18	31.25	45.00	117.75	15.94	761.88	60.85	105.85	49998
19	30.50	45.00	132.05	19.22	845.96	66.84	111.84	49998
		45.00	132.05	0.00	1545.93	65.92	110.92	149994
20	29.50	45.00	152.13	0.00	1714.16	67.00	112.00	149994
21	28.50	45.00	172.22	0.00	1882.52	62.56	107.56	149994
22	28.40	45.00	174.23	0.00	1899.36	72.59	117.59	149994
23	28.20	45.00	178.25	0.00	1933.05	73.96	118.96	149994
24	26.10	45.00	220.51	0.00	2287.09	89.04	134.04	149994
25	24.00	65.00	242.84	0.00	2474.15	96.89	161.89	149994
26	20.00	105.00	283.65	2.89	2816.03	111.45	216.45	149994

RIGHT side

Node no.	Y coord	Effective stresses: Water press.	Vertic -al	Active limit	Passive limit	Earth press.	Total earth press.	Adjusted soil modulus
		kN/m2	kN/m2	kN/m2	kN/m2	kN/m2	kN/m2	kN/m2

1	42.60	0.00	0.00	0.00	26.45	0.00	0.00a	19999
2	42.00	0.00	14.76	0.00	82.70	0.00	0.00a	19999
3	41.10	0.00	31.56	3.32	146.76	3.32	3.32a	19999
4	41.00	0.00	33.38	3.88	153.72	3.88	3.88a	19999
5	40.70	3.00	35.84	4.65	163.09	4.65	7.65a	19999
6	40.10	9.00	40.72	6.16	181.69	6.16	15.16a	19999
7	39.60	14.00	44.77	7.42	197.14	7.42	21.42a	19999
8	39.00	20.00	49.64	8.93	215.69	10.19	30.19	19999
		20.00	49.64	7.96	241.31	8.84	28.84	19999
9	38.30	27.00	55.33	9.58	265.70	13.25	40.25	19999
10	37.60	34.00	61.03	11.21	290.15	17.57	51.57	19999

(continued)

Stage No.5 Excavate to elevation 40.10 on LEFT side

		RIGHT side						
			Effective stresses				Total	Adjusted
Node no.	Y coord	Water press.	Vertic -al	Active limit	Passive limit	Earth press.	earth press.	soil modulus
		kN/m2	kN/m2	kN/m2	kN/m2	kN/m2	kN/m2	kN/m2
11	36.85	41.50	67.15	12.95	316.39	22.05	63.55	19999
12	36.10	45.00	77.27	15.84	359.79	28.80	73.80	19999
13	35.10	45.00	95.42	21.01	437.60	39.55	84.55	19999
14	34.50	45.00	106.30	24.11	484.24	45.48	90.48	19999
		45.00	106.30	13.32	694.58	26.99	71.99	49997
15	33.75	45.00	120.63	16.60	778.81	37.54	82.54	49997
16	33.00	45.00	134.93	19.88	862.91	48.03	93.03	49997
17	32.00	45.00	153.97	24.23	974.83	58.64	103.64	49997
18	31.25	45.00	168.22	27.50	1058.61	66.69	111.69	49997
19	30.50	45.00	182.45	30.75	1142.28	72.61	117.61	49997
		45.00	182.45	0.00	1968.22	49.64	94.64	149992
20	29.50	45.00	202.40	0.00	2135.32	62.55	107.55	149992
21	28.50	45.00	222.32	0.00	2302.20	81.27	126.27	149992
22	28.40	45.00	224.31	0.00	2318.87	72.60	117.60	149992
23	28.20	45.00	228.29	0.00	2352.22	74.01	119.01	149992
24	26.10	45.00	270.03	0.42	2701.99	89.05	134.05	149992
25	24.00	65.00	291.73	4.37	2883.76	96.97	161.97	149992
26	20.00	105.00	331.10	11.53	3213.62	111.29	216.29	149992

Legend: 21.42 a Soil pressure at active limit
26.45 p Soil pressure at passive limit

TONKIN + TAYLOR LTD | Sheet No.
Program: WALLAP Version 6.09 Revision A61.B78.R61 | Job No.
Licensed from GEOSOLVE | Made by :
Data filename/Run ID: 20261027_UoA_Section3_Anc_DeflectionEnvelope
New data set - contains default parameters | Date:28-10-2026
Please modify / add | Checked :

Units: kN,m

Stage No.5 Excav. to elev. 40.10 on LEFT side

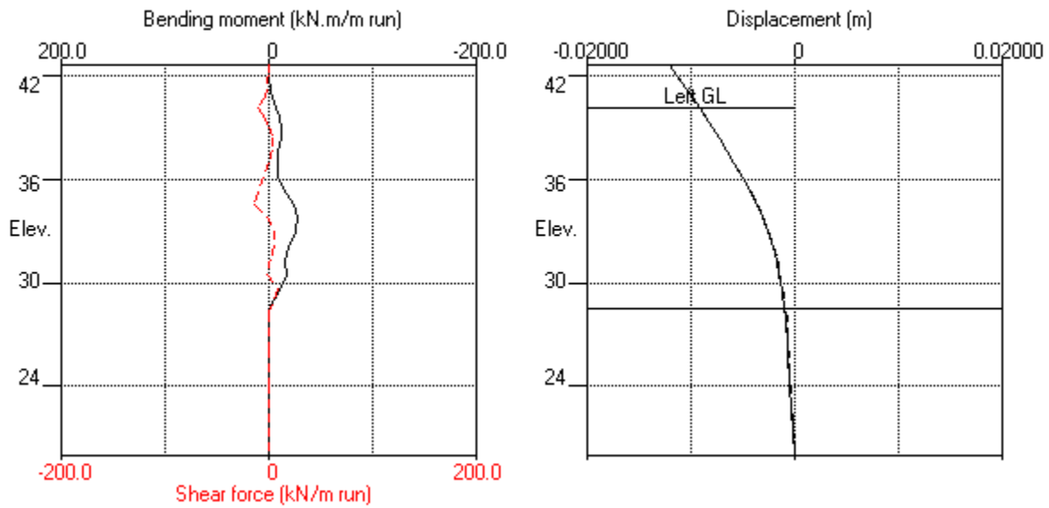

Stage No.5 Excav. to elev. 40.10 on LEFT side

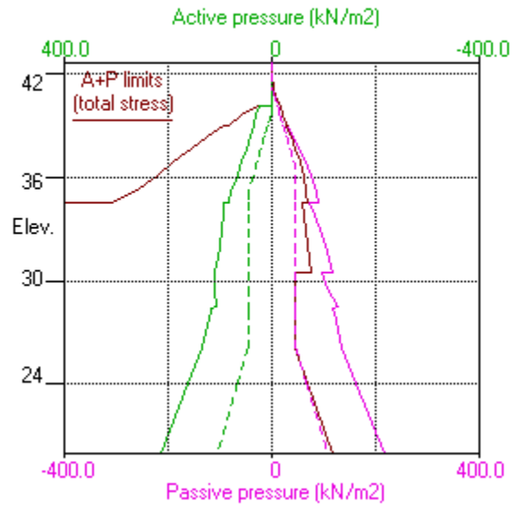

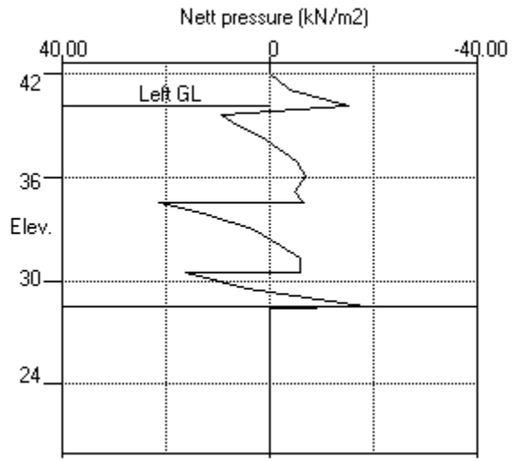

Units: kN,m

Stage No.6 Install prop no.1 at elev. 40.70

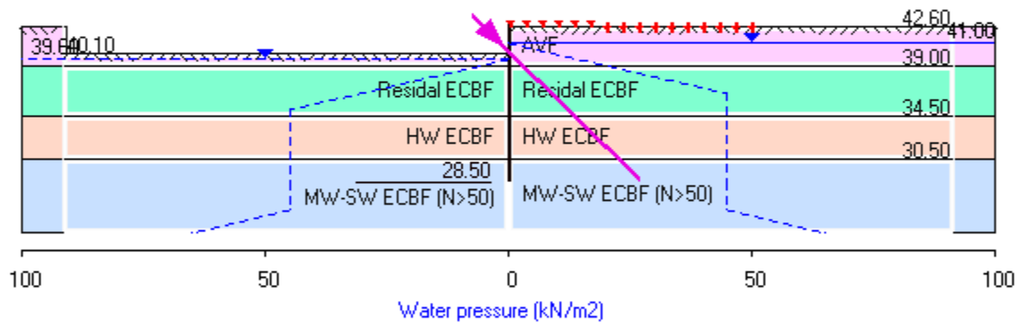

TONKIN + TAYLOR LTD | Sheet No.
Program: WALLAP Version 6.09 Revision A61.B78.R61 | Job No.
Licensed from GEOSOLVE | Made by :
Data filename/Run ID: 20261027_UoA_Section3_Anc_DeflectionEnvelope
New data set - contains default parameters | Date:28-10-2026
Please modify / add | Checked :

Units: kN,m

Stage No. 6 Install strut or anchor no.1 at elevation 40.70

STABILITY ANALYSIS of Fully Embedded Wall according to Strength Factor method

Factor of safety on soil strength

Stage No.	Ground level Act.	Pass.	Prop Elev.	FoS for toe elev. = 28.50 Factor of Safety	Moment equilib. at elev.	Toe elev. for FoS = 1.500 Wall Penetr -ation	Direction of failure
6	42.60	40.10	40.70	Conditions not suitable for FoS calc.			

BENDING MOMENT and DISPLACEMENT ANALYSIS of Fully Embedded Wall

Analysis options

2-D finite element model. Active limit arching modelled.
Soil deformations are elastic until the active or passive limit is reached
Open Tension Crack analysis - No

Length of wall perpendicular to section = 1000.00m

Rigid boundaries:	Left side 40.00m from wall	Rough
	Right side 40.00m from wall	Rough
	Lower boundary at elevation 20.00m	Rough
	Soil-wall interface	Smooth

*** Wall displacements reset to zero at stage 3

Warnings concerning changes to wall stiffness
have been ignored. Please review the calculated bending moments
for unexpected values and read the Help Topic

Node no.	Y coord	Nett pressure	Wall disp.	Wall rotation	Shear force	Bending moment	Prop forces	EI of wall
		kN/m2	m	rad.	kN/m	kN.m/m	kN/m	kN.m2/m
1	42.60	-26.45	0.002	6.18E-04	0.0	0.0		187670
2	42.00	-33.33	0.001	6.26E-04	-17.9	-5.2		187670
3	41.10	-33.55	0.001	7.26E-04	-48.0	-36.1		187670
4	41.00	-31.75	0.001	7.46E-04	-51.3	-41.1		187670
5	40.70	-33.09	0.000	8.26E-04	-61.0	-58.0	147.3	187670
		-33.09	0.000	8.26E-04	86.3	-58.0		
6	40.10	-36.43	-0.000	9.39E-04	65.4	-12.7		187670
7	39.60	-34.70	-0.001	9.36E-04	47.7	15.3		187670
8	39.00	-25.27	-0.001	8.51E-04	29.7	37.7		187670
9	38.30	-18.64	-0.002	6.84E-04	14.3	52.2		187670
10	37.60	-13.95	-0.002	4.79E-04	2.9	57.7		187670
11	36.85	-11.44	-0.002	2.52E-04	-6.6	55.9		187670
12	36.10	-8.60	-0.002	4.60E-05	-14.1	48.0		187670
13	35.10	-3.68	-0.002	-1.62E-04	-20.3	30.5		187670

14	34.50	-7.33	-0.002	-2.38E-04	-23.6	17.6	187670
		18.91	-0.002	-2.38E-04	-23.6	17.6	
15	33.75	11.26	-0.002	-2.85E-04	-12.3	5.3	187670
16	33.00	5.26	-0.002	-2.95E-04	-6.1	-0.8	187670
17	32.00	0.93	-0.002	-2.82E-04	-3.0	-4.2	187670
18	31.25	-2.53	-0.001	-2.61E-04	-3.6	-6.2	187670
19	30.50	-5.31	-0.001	-2.29E-04	-6.5	-9.6	187670
		17.69	-0.001	-2.29E-04	-6.5	-9.6	
20	29.50	4.91	-0.001	-1.85E-04	4.8	-7.2	187670
21	28.50	-13.16	-0.001	-1.66E-04	0.7	0.0	0
22	28.40	-0.00	-0.001	0	-0.0	0.0	0
23	28.20	-0.05	-0.001	0	-0.0	0.0	0

(continued)

Stage No.6 Install strut or anchor no.1 at elevation 40.70

Node no.	Y coord	Nett pressure	Wall disp.	Wall rotation	Shear force	Bending moment	Prop forces	EI of wall
		kN/m2	m	rad.	kN/m	kN.m/m	kN/m	kN.m2/m
24	26.10	-0.01	-0.001	0	-0.1	0.0		0
25	24.00	-0.08	-0.000	0	-0.2	0.0		0
26	20.00	0.16	-0.000	0	0.0	0.0		---

At elev. 40.70 Prop force = 147.3 kN/m run (horiz.)
= 208.3 kN/m run (inclined)

LEFT side

Node no.	Y coord	Effective stresses: Water press.	Vertic -al	Active limit	Passive limit	Earth press.	Total earth press.	Adjusted soil modulus
		kN/m2	kN/m2	kN/m2	kN/m2	kN/m2	kN/m2	kN/m2
1	42.60	0.00	0.00	0.00	0.00	0.00	0.00	0.0
2	42.00	0.00	0.00	0.00	0.00	0.00	0.00	0.0
3	41.10	0.00	0.00	0.00	0.00	0.00	0.00	0.0
4	41.00	0.00	0.00	0.00	0.00	0.00	0.00	0.0
5	40.70	0.00	0.00	0.00	0.00	0.00	0.00	0.0
6	40.10	0.00	0.00	0.00	0.00	0.00	0.00	0.0
		0.00	0.00	0.00	26.45	0.00	0.00a	19999
7	39.60	0.00	9.00	0.00	60.76	2.95	2.95	19999
8	39.00	6.00	13.80	0.00	79.06	10.42	16.42	19999
		6.00	13.80	0.00	87.64	9.08	15.08	19999
9	38.30	13.00	19.40	0.00	111.66	15.85	28.85	19999
10	37.60	20.00	25.00	0.94	135.68	21.44	41.44	19999
11	36.85	27.50	31.01	2.65	161.43	26.00	53.50	19999
12	36.10	35.00	37.02	4.36	187.20	29.77	64.77	19999
13	35.10	45.00	45.04	6.65	221.57	34.20	79.20	19999
14	34.50	45.00	55.85	9.73	267.94	38.04	83.04	19999
		45.00	55.85	1.77	398.02	45.63	90.63	49998
15	33.75	45.00	70.12	5.04	481.92	48.20	93.20	49998
16	33.00	45.00	84.40	8.31	565.87	51.41	96.41	49998
17	32.00	45.00	103.45	12.67	677.85	57.47	102.47	49998
18	31.25	45.00	117.75	15.94	761.88	61.88	106.88	49998
19	30.50	45.00	132.05	19.22	845.96	66.74	111.74	49998
		45.00	132.05	0.00	1545.93	65.64	110.64	149994
20	29.50	45.00	152.13	0.00	1714.16	66.60	111.60	149994
21	28.50	45.00	172.22	0.00	1882.52	64.81	109.81	149994
22	28.40	45.00	174.23	0.00	1899.36	72.19	117.19	149994
23	28.20	45.00	178.25	0.00	1933.05	73.62	118.62	149994
24	26.10	45.00	220.51	0.00	2287.09	88.78	133.78	149994
25	24.00	65.00	242.84	0.00	2474.15	96.66	161.66	149994
26	20.00	105.00	283.65	2.89	2816.03	111.18	216.18	149994

RIGHT side

Node	Y	Effective stresses: Water	Vertic	Active	Passive	Earth	Total earth	Adjusted soil

no.	coord	press.	-al	limit	limit	press.	press.	modulus
		kN/m2	kN/m2	kN/m2	kN/m2	kN/m2	kN/m2	kN/m2
1	42.60	0.00	0.00	0.00	26.45	26.45	26.45p	19999
2	42.00	0.00	14.76	0.00	82.70	33.33	33.33	19999
3	41.10	0.00	31.56	3.32	146.76	33.55	33.55	19999
4	41.00	0.00	33.38	3.88	153.72	31.75	31.75	19999
5	40.70	3.00	35.84	4.65	163.09	30.09	33.09	19999
6	40.10	9.00	40.72	6.16	181.69	27.43	36.43	19999
7	39.60	14.00	44.77	7.42	197.14	23.65	37.65	19999
8	39.00	20.00	49.64	8.93	215.69	21.69	41.69	19999
		20.00	49.64	7.96	241.31	20.34	40.34	19999

(continued)

Stage No.6 Install strut or anchor no.1 at elevation 40.70

		RIGHT side						
			Effective stresses				Total	Adjusted
Node no.	Y coord	Water press.	Vertic -al	Active limit	Passive limit	Earth press.	earth press.	soil modulus
		kN/m2	kN/m2	kN/m2	kN/m2	kN/m2	kN/m2	kN/m2
9	38.30	27.00	55.33	9.58	265.70	20.48	47.48	19999
10	37.60	34.00	61.03	11.21	290.15	21.39	55.39	19999
11	36.85	41.50	67.15	12.95	316.39	23.43	64.93	19999
12	36.10	45.00	77.27	15.84	359.79	28.37	73.37	19999
13	35.10	45.00	95.42	21.01	437.60	37.88	82.88	19999
14	34.50	45.00	106.30	24.11	484.24	45.37	90.37	19999
		45.00	106.30	13.32	694.58	26.72	71.72	49997
15	33.75	45.00	120.63	16.60	778.81	36.94	81.94	49997
16	33.00	45.00	134.93	19.88	862.91	46.16	91.16	49997
17	32.00	45.00	153.97	24.23	974.83	56.54	101.54	49997
18	31.25	45.00	168.22	27.50	1058.61	64.41	109.41	49997
19	30.50	45.00	182.45	30.75	1142.28	72.05	117.05	49997
		45.00	182.45	0.00	1968.22	47.95	92.95	149992
20	29.50	45.00	202.40	0.00	2135.32	61.69	106.69	149992
21	28.50	45.00	222.32	0.00	2302.20	77.97	122.97	149992
22	28.40	45.00	224.31	0.00	2318.87	72.19	117.19	149992
23	28.20	45.00	228.29	0.00	2352.22	73.67	118.67	149992
24	26.10	45.00	270.03	0.42	2701.99	88.79	133.79	149992
25	24.00	65.00	291.73	4.37	2883.76	96.74	161.74	149992
26	20.00	105.00	331.10	11.53	3213.62	111.02	216.02	149992

Legend: 0.00 a Soil pressure at active limit
26.45 p Soil pressure at passive limit

TONKIN + TAYLOR LTD | Sheet No.
Program: WALLAP Version 6.09 Revision A61.B78.R61 | Job No.
Licensed from GEOSOLVE | Made by :
Data filename/Run ID: 20261027_UoA_Section3_Anc_DeflectionEnvelope
New data set - contains default parameters | Date:28-10-2026
Please modify / add | Checked :

Units: kN,m

Stage No.6 Install prop no.1 at elev. 40.70

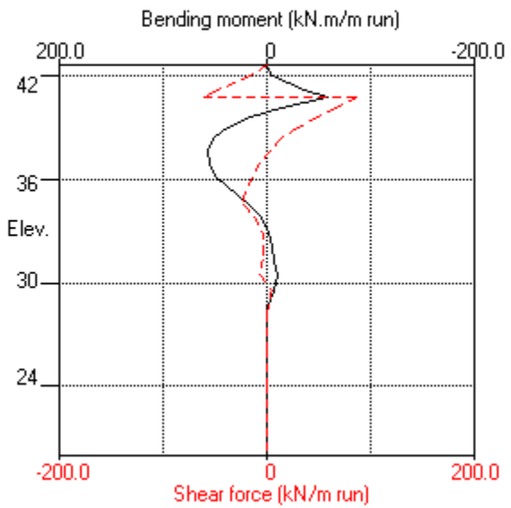

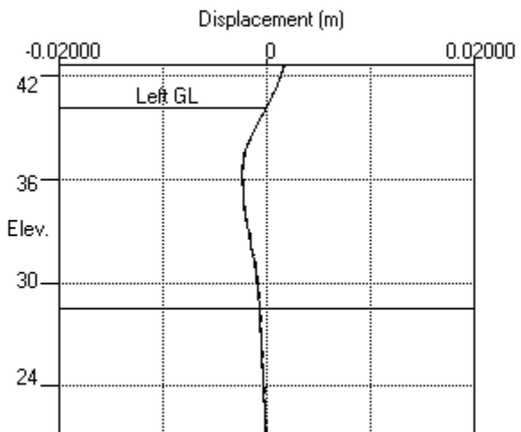

Stage No.6 Install prop no.1 at elev. 40.70

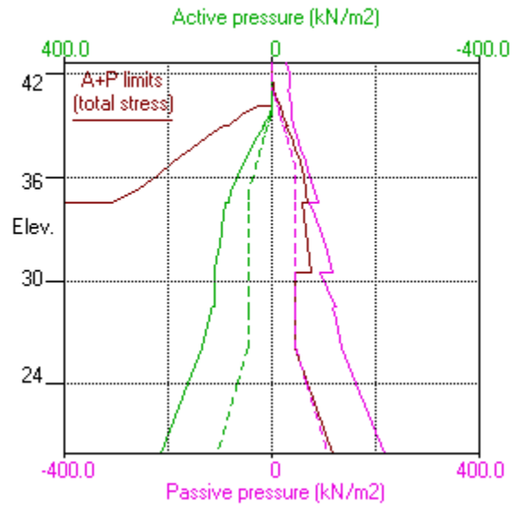

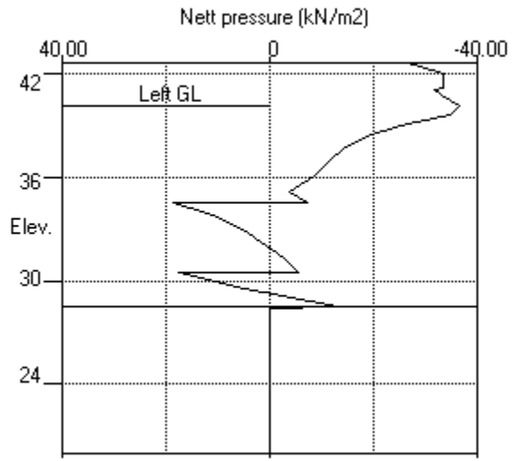

Units: kN,m

Stage No.8 Excav. to elev. 35.10 on LEFT side

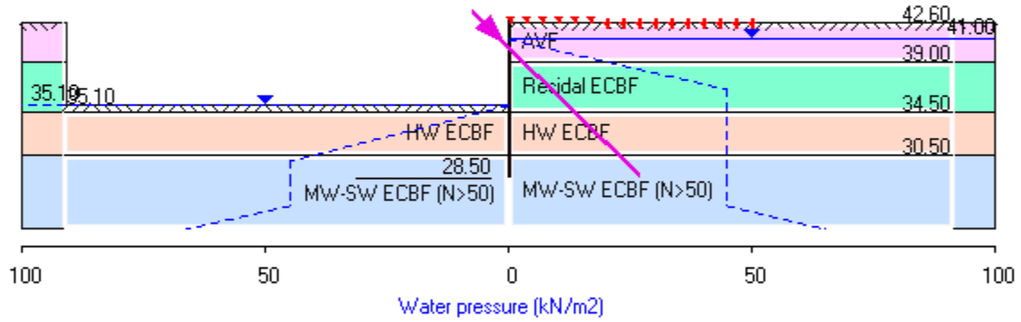

TONKIN + TAYLOR LTD | Sheet No.
Program: WALLAP Version 6.09 Revision A61.B78.R61 | Job No.
Licensed from GEOSOLVE | Made by :
Data filename/Run ID: 20261027_UoA_Section3_Anc_DeflectionEnvelope
New data set - contains default parameters | Date:28-10-2026
Please modify / add | Checked :

Units: kN,m

Stage No. 8 Excavate to elevation 35.10 on LEFT side

STABILITY ANALYSIS of Fully Embedded Wall according to Strength Factor method

Factor of safety on soil strength

Stage No.	Ground level Act.	Pass.	FoS for toe elev. = 28.50 Prop Elev.	Factor of Safety	Moment equilib. at elev.	Toe Elev. for FoS = 1.500 Toe elev.	Wall Penetr -ation	Direction of failure
8	42.60	35.10	40.70	2.833	n/a	31.12	3.98	R to L

BENDING MOMENT and DISPLACEMENT ANALYSIS of Fully Embedded Wall

Analysis options

2-D finite element model. Active limit arching modelled.
Soil deformations are elastic until the active or passive limit is reached
Open Tension Crack analysis - No

Length of wall perpendicular to section = 1000.00m
Rigid boundaries: Left side 40.00m from wall Rough
Right side 40.00m from wall Rough
Lower boundary at elevation 20.00m Rough
Soil-wall interface Smooth

*** Wall displacements reset to zero at stage 3

Warnings concerning changes to wall stiffness
have been ignored. Please review the calculated bending moments
for unexpected values and read the Help Topic

Node no.	Y coord	Nett pressure	Wall disp.	Wall rotation	Shear force	Bending moment	Prop forces	EI of wall
		kN/m2	m	rad.	kN/m	kN.m/m	kN/m	kN.m2/m
1	42.60	-26.45	-0.005	1.69E-03	0.0	0.0		187670
2	42.00	-35.05	-0.006	1.70E-03	-18.5	-5.2		187670
3	41.10	-30.54	-0.007	1.80E-03	-48.0	-37.3		187670
4	41.00	-25.39	-0.007	1.83E-03	-50.8	-42.3		187670
5	40.70	-24.25	-0.008	1.91E-03	-58.2	-58.7	166.9	187670
		-24.25	-0.008	1.91E-03	108.7	-58.7		
6	40.10	-24.08	-0.009	2.00E-03	94.2	1.6		187670
7	39.60	-21.13	-0.010	1.94E-03	82.9	45.4		187670
8	39.00	-20.96	-0.011	1.72E-03	70.2	90.6		187670
		-20.00	-0.011	1.72E-03	70.2	90.6		
9	38.30	-27.00	-0.012	1.30E-03	53.8	133.7		187670
10	37.60	-34.00	-0.013	7.51E-04	32.4	163.7		187670
11	36.85	-41.50	-0.013	7.02E-05	4.1	177.4		187670
12	36.10	-46.69	-0.013	-6.19E-04	-28.9	167.9		187670

13	35.10	-53.72	-0.012	-1.36E-03	-79.1	114.2	187670
		-25.25	-0.012	-1.36E-03	-79.1	114.2	
14	34.50	-17.08	-0.011	-1.65E-03	-91.8	62.4	187670
		56.85	-0.011	-1.65E-03	-91.8	62.4	
15	33.75	36.26	-0.010	-1.79E-03	-56.9	9.9	187670
16	33.00	24.39	-0.009	-1.77E-03	-34.2	-22.2	187670
17	32.00	12.20	-0.007	-1.59E-03	-15.9	-43.2	187670
18	31.25	-2.75	-0.006	-1.41E-03	-12.3	-51.2	187670
19	30.50	-8.29	-0.005	-1.18E-03	-16.5	-60.8	187670
		73.64	-0.005	-1.18E-03	-16.5	-60.8	
20	29.50	19.72	-0.004	-9.19E-04	30.2	-40.1	187670
21	28.50	-72.84	-0.003	-8.12E-04	3.6	-0.0	0

(continued)

Stage No.8 Excavate to elevation 35.10 on LEFT side

Node no.	Y coord	Nett pressure	Wall disp.	Wall rotation	Shear force	Bending moment	Prop forces	EI of wall
		kN/m2	m	rad.	kN/m	kN.m/m	kN/m	kN.m2/m
22	28.40	-0.00	-0.003	0	-0.0	0.0		0
23	28.20	-0.06	-0.003	0	-0.0	0.0		0
24	26.10	-0.12	-0.002	0	-0.2	0.0		0
25	24.00	-0.05	-0.002	0	-0.4	0.0		0
26	20.00	0.24	-0.000	0	-0.0	0.0		---
At elev. 40.70				Prop force =	166.9 kN/m run (horiz.)			
				=	236.0 kN/m run (inclined)			

LEFT side

Node no.	Y coord	Water press.	Effective stresses Vertic -al	Active limit	Passive limit	Earth press.	Total earth press.	Adjusted soil modulus
		kN/m2	kN/m2	kN/m2	kN/m2	kN/m2	kN/m2	kN/m2
1	42.60	0.00	0.00	0.00	0.00	0.00	0.00	0.0
2	42.00	0.00	0.00	0.00	0.00	0.00	0.00	0.0
3	41.10	0.00	0.00	0.00	0.00	0.00	0.00	0.0
4	41.00	0.00	0.00	0.00	0.00	0.00	0.00	0.0
5	40.70	0.00	0.00	0.00	0.00	0.00	0.00	0.0
6	40.10	0.00	0.00	0.00	0.00	0.00	0.00	0.0
7	39.60	0.00	0.00	0.00	0.00	0.00	0.00	0.0
8	39.00	0.00	0.00	0.00	0.00	0.00	0.00	0.0
9	38.30	0.00	0.00	0.00	0.00	0.00	0.00	0.0
10	37.60	0.00	0.00	0.00	0.00	0.00	0.00	0.0
11	36.85	0.00	0.00	0.00	0.00	0.00	0.00	0.0
12	36.10	0.00	0.00	0.00	0.00	0.00	0.00	0.0
13	35.10	0.00	0.00	0.00	0.00	0.00	0.00	0.0
		0.00	0.00	0.00	28.47	28.47	28.47p	19999
14	34.50	5.40	5.40	0.00	51.63	43.48	48.88	19999
		5.40	5.40	0.00	101.42	96.45	101.85	49999
15	33.75	12.15	12.90	0.00	145.53	84.24	96.39	49999
16	33.00	18.90	20.41	0.00	189.65	70.37	89.27	49999
17	32.00	27.90	30.43	0.00	248.55	61.72	89.62	49999
18	31.25	34.65	37.95	0.00	292.78	55.20	89.85	49999
19	30.50	41.40	45.49	0.00	337.08	53.54	94.94	49999
		41.40	45.49	0.00	820.72	83.74	125.14	149996
20	29.50	45.00	61.95	0.00	958.69	61.25	106.25	149996
21	28.50	45.00	82.05	0.00	1127.05	21.89	66.89	149996
22	28.40	45.00	84.06	0.00	1143.90	58.95	103.95	149996
23	28.20	45.00	88.08	0.00	1177.61	60.17	105.17	149996
24	26.10	45.00	130.42	0.00	1532.26	74.89	119.89	149996
25	24.00	66.00	151.92	0.00	1712.42	81.78	147.78	149996
26	20.00	106.00	193.43	0.00	2060.16	96.22	202.22	149996

RIGHT side

Effective stresses	Total	Adjusted

Node no.	Y coord	Water press.	Vertic -al	Active limit	Passive limit	Earth press.	earth press.	soil modulus
		kN/m2	kN/m2	kN/m2	kN/m2	kN/m2	kN/m2	kN/m2
1	42.60	0.00	0.00	0.00	26.45	26.45	26.45p	19999
2	42.00	0.00	14.76	0.00	82.70	35.05	35.05	19999
3	41.10	0.00	31.56	3.32	146.76	30.54	30.54	19999
4	41.00	0.00	33.38	3.88	153.72	25.39	25.39	19999
5	40.70	3.00	35.84	4.65	163.09	21.25	24.25	19999
6	40.10	9.00	40.72	6.16	181.69	15.08	24.08	19999
7	39.60	14.00	44.77	7.42	197.14	7.13	21.13A	19999
8	39.00	20.00	49.64	8.93	215.69	0.96	20.96A	19999
		20.00	49.64	7.96	241.31	0.00	20.00A	19999

(continued)

Stage No.8 Excavate to elevation 35.10 on LEFT side

		RIGHT side						
		Effective stresses					Total earth	Adjusted soil
Node no.	Y coord	Water press.	Vertic -al	Active limit	Passive limit	Earth press.	press.	modulus
		kN/m2	kN/m2	kN/m2	kN/m2	kN/m2	kN/m2	kN/m2
9	38.30	27.00	55.33	9.58	265.70	0.00	27.00A	19999
10	37.60	34.00	61.03	11.21	290.15	0.00	34.00A	19999
11	36.85	41.50	67.15	12.95	316.39	0.00	41.50A	19999
12	36.10	45.00	77.27	15.84	359.79	1.69	46.69A	19999
13	35.10	45.00	95.42	21.01	437.60	8.72	53.72A	19999
14	34.50	45.00	106.30	24.11	484.24	20.96	65.96A	19999
		45.00	106.30	13.32	694.58	0.00	45.00A	49997
15	33.75	45.00	120.63	16.60	778.81	15.13	60.13A	49997
16	33.00	45.00	134.93	19.88	862.91	19.88	64.88a	49997
17	32.00	45.00	153.97	24.23	974.83	32.42	77.42	49997
18	31.25	45.00	168.22	27.50	1058.61	47.60	92.60	49997
19	30.50	45.00	182.45	30.75	1142.28	58.23	103.23	49997
		45.00	182.45	0.00	1968.22	6.49	51.49	149992
20	29.50	45.00	202.40	0.00	2135.32	41.53	86.53	149992
21	28.50	45.00	222.32	0.00	2302.20	94.72	139.72	149992
22	28.40	45.00	224.31	0.00	2318.87	58.95	103.95	149992
23	28.20	45.00	228.29	0.00	2352.22	60.23	105.23	149992
24	26.10	45.00	270.03	0.42	2701.99	75.01	120.01	149992
25	24.00	65.00	291.73	4.37	2883.76	82.83	147.83	149992
26	20.00	105.00	331.10	11.53	3213.62	96.98	201.98	149992

Legend: 64.88 a Soil pressure at active limit
26.45 p Soil pressure at passive limit
60.13 A Arching - soil pressure below active limit

TONKIN + TAYLOR LTD | Sheet No.
Program: WALLAP Version 6.09 Revision A61.B78.R61 | Job No.
Licensed from GEOSOLVE | Made by :
Data filename/Run ID: 20261027_UoA_Section3_Anc_DeflectionEnvelope
New data set - contains default parameters | Date:28-10-2026
Please modify / add | Checked :

Units: kN,m

Stage No.8 Excav. to elev. 35.10 on LEFT side

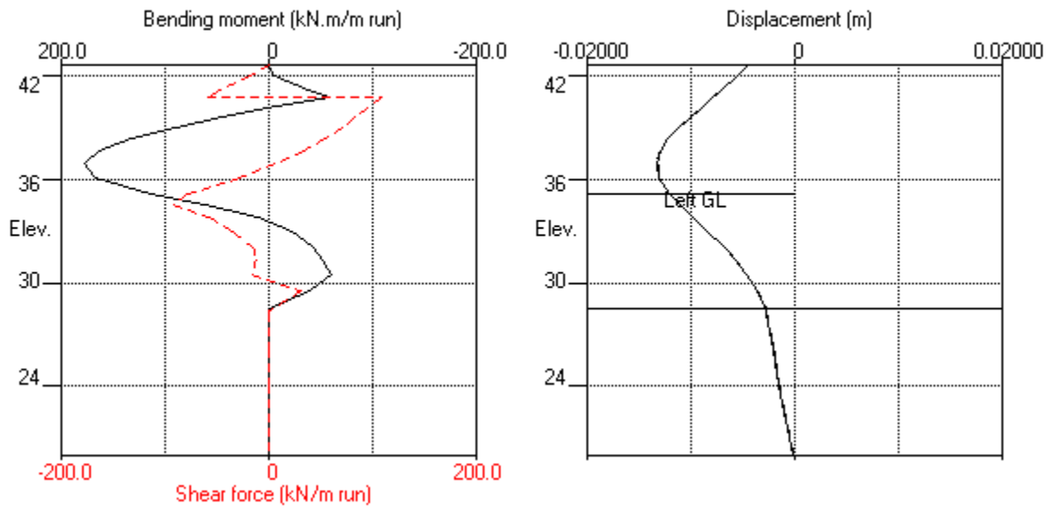

Stage No.8 Excav. to elev. 35.10 on LEFT side

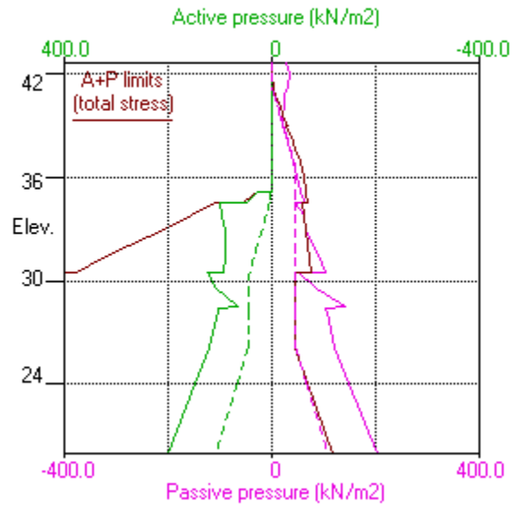

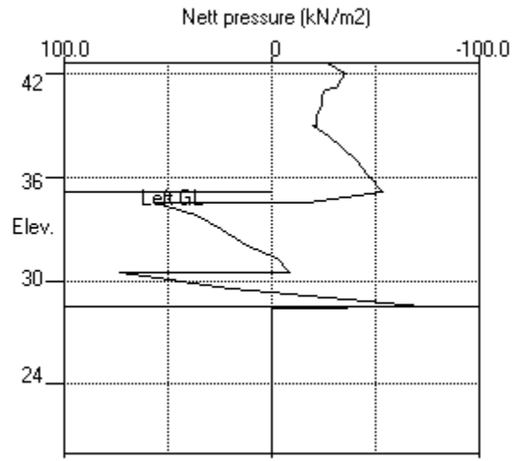

Units: kN,m

Stage No.9 Fill to elev. 36.10 on LEFT side

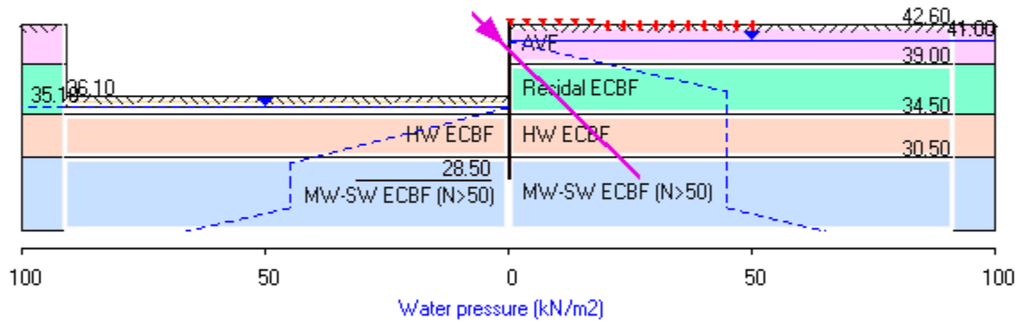

TONKIN + TAYLOR LTD | Sheet No.
Program: WALLAP Version 6.09 Revision A61.B78.R61 | Job No.
Licensed from GEOSOLVE | Made by :
Data filename/Run ID: 20261027_UoA_Section3_Anc_DeflectionEnvelope
New data set - contains default parameters | Date:28-10-2026
Please modify / add | Checked :

Units: kN,m

Stage No. 9 Fill to elevation 36.10 on LEFT side with soil type 5

STABILITY ANALYSIS of Fully Embedded Wall according to Strength Factor method

Factor of safety on soil strength

Stage No.	Ground level Act.	Pass.	Prop Elev.	FoS for toe elev. = 28.50 Factor of Safety	Moment equilib. at elev.	Toe elev. for FoS = 1.500 Toe elev.	Wall Penetr-ation	Direction of failure
9	42.60	36.10	40.70	3.598	n/a	33.07	3.03	R to L

BENDING MOMENT and DISPLACEMENT ANALYSIS of Fully Embedded Wall

Analysis options

2-D finite element model. Active limit arching modelled.
Soil deformations are elastic until the active or passive limit is reached
Open Tension Crack analysis - No

Length of wall perpendicular to section = 1000.00m
Rigid boundaries: Left side 40.00m from wall Rough
Right side 40.00m from wall Rough
Lower boundary at elevation 20.00m Rough
Soil-wall interface Smooth

*** Wall displacements reset to zero at stage 3

Warnings concerning changes to wall stiffness
have been ignored. Please review the calculated bending moments
for unexpected values and read the Help Topic

Node no.	Y coord	Nett pressure	Wall disp.	Wall rotation	Shear force	Bending moment	Prop forces	EI of wall
		kN/m2	m	rad.	kN/m	kN.m/m	kN/m	kN.m2/m
1	42.60	-25.31	-0.006	1.74E-03	0.0	0.0		187670
2	42.00	-33.09	-0.007	1.75E-03	-17.5	-5.0		187670
3	41.10	-27.92	-0.009	1.85E-03	-45.0	-35.5		187670
4	41.00	-22.31	-0.009	1.87E-03	-47.5	-40.1		187670
5	40.70	-20.83	-0.010	1.95E-03	-54.0	-55.4	170.6	187670
		-20.83	-0.010	1.95E-03	116.7	-55.4		
6	40.10	-20.20	-0.011	2.02E-03	104.4	10.3		187670
7	39.60	-21.42	-0.012	1.93E-03	94.0	59.7		187670
8	39.00	-28.93	-0.013	1.65E-03	78.9	111.4		187670
		-27.96	-0.013	1.65E-03	78.9	111.4		
9	38.30	-36.58	-0.014	1.15E-03	56.3	158.7		187670
10	37.60	-45.21	-0.014	5.08E-04	27.6	188.1		187670
11	36.85	-54.45	-0.014	-2.56E-04	-9.7	194.9		187670
12	36.10	-45.00	-0.014	-9.88E-04	-47.0	171.5		187670

13	35.10	-34.33	-0.013	-1.71E-03	-86.7	101.3	187670
		-13.63	-0.013	-1.71E-03	-86.7	101.3	
14	34.50	-7.15	-0.012	-1.95E-03	-92.9	47.1	187670
		51.67	-0.012	-1.95E-03	-92.9	47.1	
15	33.75	42.19	-0.010	-2.03E-03	-57.7	-7.7	187670
16	33.00	26.89	-0.009	-1.93E-03	-31.8	-38.7	187670
17	32.00	13.49	-0.007	-1.68E-03	-11.6	-56.0	187670
18	31.25	-1.64	-0.006	-1.45E-03	-7.2	-60.5	187670
19	30.50	-5.59	-0.005	-1.20E-03	-9.9	-66.0	187670
		68.38	-0.005	-1.20E-03	-9.9	-66.0	
20	29.50	16.93	-0.003	-9.16E-04	32.8	-41.2	187670
21	28.50	-74.97	-0.003	-8.06E-04	3.7	-0.0	0

(continued)

Stage No.9 Fill to elevation 36.10 on LEFT side with soil type 5

Node no.	Y coord	Nett pressure	Wall disp.	Wall rotation	Shear force	Bending moment	Prop forces	EI of wall
		kN/m2	m	rad.	kN/m	kN.m/m	kN/m	kN.m2/m
22	28.40	-0.00	-0.003	0	-0.0	0.0		0
23	28.20	-0.06	-0.003	0	-0.0	0.0		0
24	26.10	-0.12	-0.002	0	-0.2	0.0		0
25	24.00	-0.04	-0.001	0	-0.4	0.0		0
26	20.00	0.23	-0.000	0	-0.0	0.0		---

At elev. 40.70 Prop force = 170.6 kN/m run (horiz.)
= 241.3 kN/m run (inclined)

LEFT side

Node no.	Y coord	Effective stresses: Water press.	Vertic -al	Active limit	Passive limit	Earth press.	Total earth press.	Adjusted soil modulus
		kN/m2	kN/m2	kN/m2	kN/m2	kN/m2	kN/m2	kN/m2
1	42.60	0.00	0.00	0.00	0.00	0.00	0.00	0.0
2	42.00	0.00	0.00	0.00	0.00	0.00	0.00	0.0
3	41.10	0.00	0.00	0.00	0.00	0.00	0.00	0.0
4	41.00	0.00	0.00	0.00	0.00	0.00	0.00	0.0
5	40.70	0.00	0.00	0.00	0.00	0.00	0.00	0.0
6	40.10	0.00	0.00	0.00	0.00	0.00	0.00	0.0
7	39.60	0.00	0.00	0.00	0.00	0.00	0.00	0.0
8	39.00	0.00	0.00	0.00	0.00	0.00	0.00	0.0
9	38.30	0.00	0.00	0.00	0.00	0.00	0.00	0.0
10	37.60	0.00	0.00	0.00	0.00	0.00	0.00	0.0
11	36.85	0.00	0.00	0.00	0.00	0.00	0.00	0.0
12	36.10	0.00	0.00	0.00	0.00	0.00	0.00	0.0
		0.00	0.00	0.00	0.00	0.00	0.00	149996
13	35.10	0.00	20.00	2.86	251.34	18.09	18.09	149996
		0.00	20.00	0.00	114.23	38.79	38.79	19999
14	34.50	5.40	25.40	1.05	137.39	52.64	58.04	19999
		5.40	25.40	0.00	219.02	104.60	110.00	49999
15	33.75	12.15	32.91	0.00	263.15	90.53	102.68	49999
16	33.00	18.90	40.42	0.00	307.32	75.02	93.92	49999
17	32.00	27.90	50.45	0.54	366.28	65.78	93.68	49999
18	31.25	34.65	57.99	2.26	410.57	59.18	93.83	49999
19	30.50	41.40	65.53	3.99	454.93	58.27	99.67	49999
		41.40	65.53	0.00	988.67	84.57	125.97	149996
20	29.50	45.00	82.02	0.00	1126.77	63.29	108.29	149996
21	28.50	45.00	102.13	0.00	1295.25	24.25	69.25	149996
22	28.40	45.00	104.14	0.00	1312.12	62.37	107.37	149996
23	28.20	45.00	108.17	0.00	1345.85	63.59	108.59	149996
24	26.10	45.00	150.52	0.00	1700.71	78.29	123.29	149996
25	24.00	66.00	172.04	0.00	1880.97	85.18	151.18	149996
26	20.00	106.00	213.50	0.00	2228.36	99.61	205.61	149996

RIGHT side

Node no.	Y coord	Effective stresses: Water press.	Vertic -al	Active limit	Passive limit	Earth press.	Total earth press.	Adjusted soil modulus
		kN/m2	kN/m2	kN/m2	kN/m2	kN/m2	kN/m2	kN/m2
1	42.60	0.00	0.00	0.00	26.45	25.31	25.31	19999
2	42.00	0.00	14.76	0.00	82.70	33.09	33.09	19999
3	41.10	0.00	31.56	3.32	146.76	27.92	27.92	19999
4	41.00	0.00	33.38	3.88	153.72	22.31	22.31	19999
5	40.70	3.00	35.84	4.65	163.09	17.83	20.83	19999
6	40.10	9.00	40.72	6.16	181.69	11.20	20.20	19999
7	39.60	14.00	44.77	7.42	197.14	7.42	21.42a	19999

(continued)

Stage No.9 Fill to elevation 36.10 on LEFT side with soil type 5

RIGHT side

Node no.	Y coord	Effective stresses: Water press.	Vertic -al	Active limit	Passive limit	Earth press.	Total earth press.	Adjusted soil modulus
		kN/m2	kN/m2	kN/m2	kN/m2	kN/m2	kN/m2	kN/m2
8	39.00	20.00	49.64	8.93	215.69	8.93	28.93a	19999
		20.00	49.64	7.96	241.31	7.96	27.96a	19999
9	38.30	27.00	55.33	9.58	265.70	9.58	36.58a	19999
10	37.60	34.00	61.03	11.21	290.15	11.21	45.21a	19999
11	36.85	41.50	67.15	12.95	316.39	12.95	54.45a	19999
12	36.10	45.00	77.27	15.84	359.79	0.00	45.00A	19999
13	35.10	45.00	95.42	21.01	437.60	7.42	52.42A	19999
14	34.50	45.00	106.30	24.11	484.24	20.19	65.19A	19999
		45.00	106.30	13.32	694.58	13.32	58.32a	49997
15	33.75	45.00	120.63	16.60	778.81	15.48	60.48A	49997
16	33.00	45.00	134.93	19.88	862.91	22.03	67.03	49997
17	32.00	45.00	153.97	24.23	974.83	35.20	80.20	49997
18	31.25	45.00	168.22	27.50	1058.61	50.47	95.47	49997
19	30.50	45.00	182.45	30.75	1142.28	60.26	105.26	49997
		45.00	182.45	0.00	1968.22	12.59	57.59	149992
20	29.50	45.00	202.40	0.00	2135.32	46.36	91.36	149992
21	28.50	45.00	222.32	0.00	2302.20	99.22	144.22	149992
22	28.40	45.00	224.31	0.00	2318.87	62.38	107.38	149992
23	28.20	45.00	228.29	0.00	2352.22	63.65	108.65	149992
24	26.10	45.00	270.03	0.42	2701.99	78.42	123.42	149992
25	24.00	65.00	291.73	4.37	2883.76	86.23	151.23	149992
26	20.00	105.00	331.10	11.53	3213.62	100.38	205.38	149992

Legend: 58.32 a Soil pressure at active limit
123.45 p Soil pressure at passive limit
60.48 A Arching - soil pressure below active limit

TONKIN + TAYLOR LTD | Sheet No.
Program: WALLAP Version 6.09 Revision A61.B78.R61 | Job No.
Licensed from GEOSOLVE | Made by :
Data filename/Run ID: 20261027_UoA_Section3_Anc_DeflectionEnvelope
New data set - contains default parameters | Date:28-10-2026
Please modify / add | Checked :

Units: kN,m

Stage No.9 Fill to elev. 36.10 on LEFT side

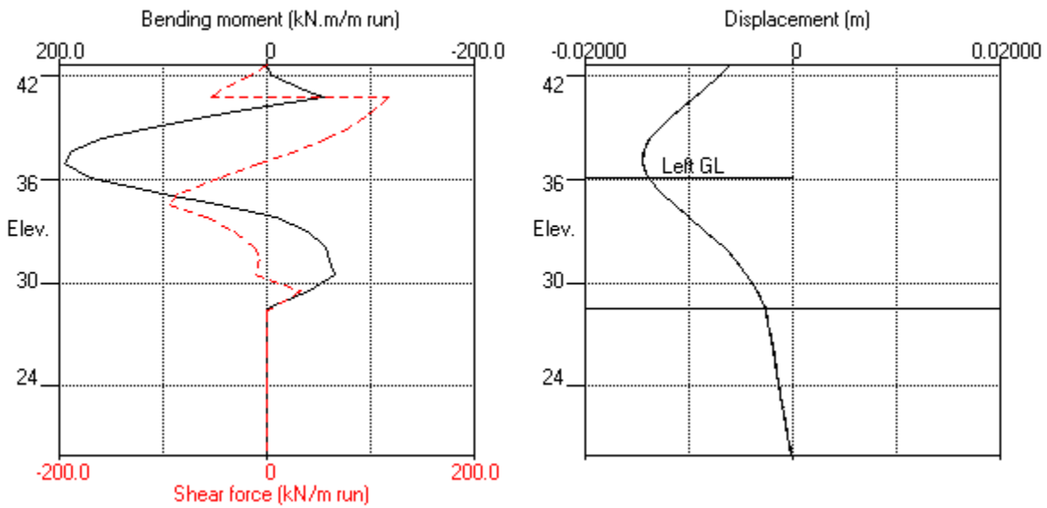

Stage No.9 Fill to elev. 36.10 on LEFT side

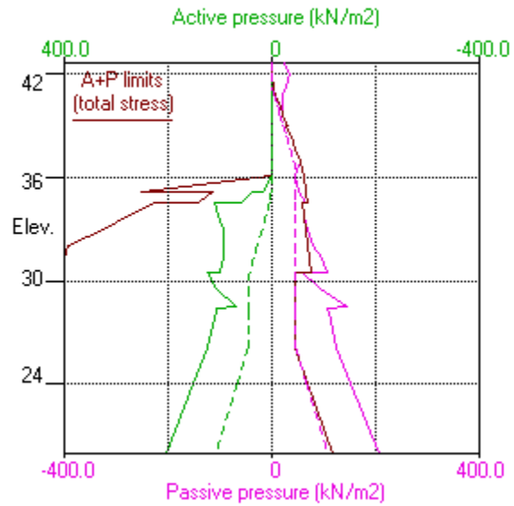

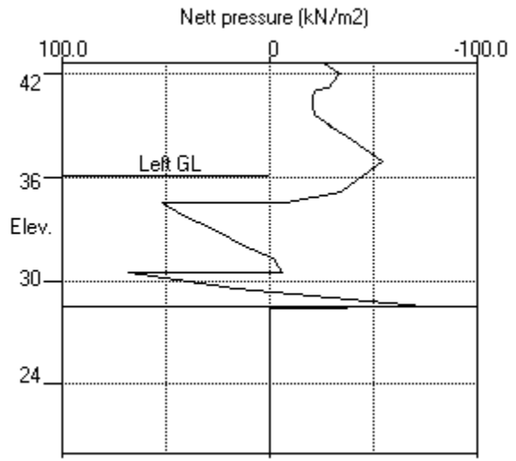

Units: kN,m

Stage No.13 Remove prop no.1 at elev. 40.70

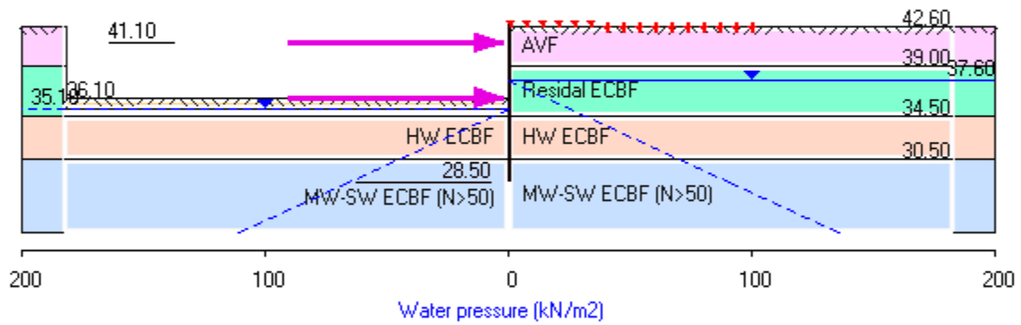

TONKIN + TAYLOR LTD | Sheet No.
Program: WALLAP Version 6.09 Revision A61.B78.R61 | Job No.
Licensed from GEOSOLVE | Made by :
Data filename/Run ID: 20261027_UoA_Section3_Anc_DeflectionEnvelope
New data set - contains default parameters | Date:28-10-2026
Please modify / add | Checked :

Units: kN,m

Stage No. 13 Remove strut or anchor no.1 at elevation 40.70

STABILITY ANALYSIS of Fully Embedded Wall according to Strength Factor method

Factor of safety on soil strength

Stage No.	Ground level Act.	Pass.	Prop Elev.	FoS for toe elev. = 28.50 Factor of Safety	Moment equilib. at elev.	Toe elev. for FoS = 1.500 Toe elev.	Wall Penetr -ation	Direction of failure
13	36.10	42.60	More than one prop. No FoS calc.					

BENDING MOMENT and DISPLACEMENT ANALYSIS of Fully Embedded Wall

Analysis options

2-D finite element model. Active limit arching modelled.
Soil deformations are elastic until the active or passive limit is reached
Open Tension Crack analysis - No

Length of wall perpendicular to section = 1000.00m

Rigid boundaries:	Left side 40.00m from wall	Rough
	Right side 40.00m from wall	Rough
	Lower boundary at elevation 20.00m	Rough
	Soil-wall interface	Smooth

*** Wall displacements reset to zero at stage 3

Warnings concerning changes to wall stiffness
have been ignored. Please review the calculated bending moments
for unexpected values and read the Help Topic

Node no.	Y coord	Nett pressure	Wall disp.	Wall rotation	Shear force	Bending moment	Prop forces	EI of wall
		kN/m2	m	rad.	kN/m	kN.m/m	kN/m	kN.m2/m
1	42.60	-26.45	-0.004	1.89E-03	0.0	0.0		187670
2	42.00	-36.95	-0.005	1.90E-03	-19.0	-5.2		187670
3	41.10	-31.33	-0.006	2.00E-03	-49.7	-38.6	142.7	187670
		-31.33	-0.006	2.00E-03	93.0	-38.6		
4	41.00	-25.08	-0.007	2.02E-03	90.1	-29.5		187670
5	40.70	-21.45	-0.007	2.05E-03	83.2	-3.6		187670
6	40.10	-17.67	-0.008	1.99E-03	71.4	42.1		187670
7	39.60	-17.02	-0.009	1.83E-03	62.7	75.5		187670
8	39.00	-22.40	-0.010	1.54E-03	50.9	109.5		187670
		-21.43	-0.010	1.54E-03	50.9	109.5		
9	38.30	-27.45	-0.011	1.07E-03	33.8	139.1		187670
10	37.60	-33.21	-0.012	5.29E-04	12.6	155.3		187670
11	36.85	-43.02	-0.012	-8.89E-05	-16.0	154.2		187670
12	36.10	-35.52	-0.012	-6.54E-04	-45.5	129.1	21.3	187670

		-35.52	-0.012	-6.54E-04	-24.2	129.1	
13	35.10	-44.72	-0.011	-1.22E-03	-64.3	85.6	187670
		-13.89	-0.011	-1.22E-03	-64.3	85.6	
14	34.50	-8.21	-0.010	-1.43E-03	-70.9	44.5	187670
		37.90	-0.010	-1.43E-03	-70.9	44.5	
15	33.75	32.65	-0.009	-1.52E-03	-44.5	2.0	187670
16	33.00	21.86	-0.008	-1.48E-03	-24.0	-22.2	187670
17	32.00	8.60	-0.006	-1.33E-03	-8.8	-35.3	187670
18	31.25	-7.15	-0.005	-1.18E-03	-8.2	-39.4	187670
19	30.50	-15.96	-0.005	-1.01E-03	-16.9	-47.6	187670
		63.44	-0.005	-1.01E-03	-16.9	-47.6	
20	29.50	17.93	-0.004	-7.98E-04	23.8	-32.8	187670

(continued)

Stage No.13 Remove strut or anchor no.1 at elevation 40.70

Node no.	Y coord	Nett pressure	Wall disp.	Wall rotation	Shear force	Bending moment	Prop forces	EI of wall
		kN/m2	m	rad.	kN/m	kN.m/m	kN/m	kN.m2/m
21	28.50	-59.56	-0.003	-7.11E-04	3.0	-0.0		0
22	28.40	-0.00	-0.003	0	-0.0	0.0		0
23	28.20	-0.06	-0.003	0	-0.0	0.0		0
24	26.10	-0.01	-0.002	0	-0.1	0.0		0
25	24.00	-0.12	-0.002	0	-0.2	0.0		0
26	20.00	0.23	-0.000	0	-0.0	0.0		---

At elev. 41.10 Prop force = 142.7 kN/m run

At elev. 36.10 Prop force = 21.3 kN/m run

LEFT side

Node no.	Y coord	Effective stresses: Water press.	Vertic -al	Active limit	Passive limit	Earth press.	Total earth press.	Adjusted soil modulus
		kN/m2	kN/m2	kN/m2	kN/m2	kN/m2	kN/m2	kN/m2
1	42.60	0.00	0.00	0.00	0.00	0.00	0.00	0.0
2	42.00	0.00	0.00	0.00	0.00	0.00	0.00	0.0
3	41.10	0.00	0.00	0.00	0.00	0.00	0.00	0.0
4	41.00	0.00	0.00	0.00	0.00	0.00	0.00	0.0
5	40.70	0.00	0.00	0.00	0.00	0.00	0.00	0.0
6	40.10	0.00	0.00	0.00	0.00	0.00	0.00	0.0
7	39.60	0.00	0.00	0.00	0.00	0.00	0.00	0.0
8	39.00	0.00	0.00	0.00	0.00	0.00	0.00	0.0
9	38.30	0.00	0.00	0.00	0.00	0.00	0.00	0.0
10	37.60	0.00	0.00	0.00	0.00	0.00	0.00	0.0
11	36.85	0.00	0.00	0.00	0.00	0.00	0.00	0.0
12	36.10	0.00	0.00	0.00	0.00	0.00	0.00	0.0
		0.00	0.00	0.00	0.00	0.00	0.00	149996
13	35.10	0.00	20.00	2.86	251.34	2.86	2.86a	149996
		0.00	20.00	0.00	114.23	33.68	33.68	19999
14	34.50	6.00	24.80	0.88	134.82	48.11	54.11	19999
		6.00	24.80	0.00	215.49	93.72	99.72	49999
15	33.75	13.50	31.56	0.00	255.21	83.30	96.80	49999
16	33.00	21.00	38.32	0.00	294.97	71.77	92.77	49999
17	32.00	31.00	47.35	0.00	348.06	65.14	96.14	49999
18	31.25	38.50	54.14	1.38	387.94	60.17	98.67	49999
19	30.50	46.00	60.93	2.94	427.89	58.77	104.77	49999
		46.00	60.93	0.00	950.14	89.12	135.12	149996
20	29.50	56.00	71.02	0.00	1034.61	68.59	124.59	149996
21	28.50	66.00	81.13	0.00	1119.32	33.37	99.37	149996
22	28.40	67.00	82.14	0.00	1127.80	63.43	130.43	149996
23	28.20	69.00	84.17	0.00	1144.78	63.95	132.95	149996
24	26.10	90.00	105.52	0.00	1323.70	71.69	161.69	149996
25	24.00	111.00	127.04	0.00	1503.96	78.80	189.80	149996
26	20.00	151.00	168.50	0.00	1851.35	93.29	244.29	149996

		RIGHT side						
			Effective stresses				Total	Adjusted
Node no.	Y coord	Water press.	Vertic -al	Active limit	Passive limit	Earth press.	earth press.	soil modulus
		kN/m2	kN/m2	kN/m2	kN/m2	kN/m2	kN/m2	kN/m2
1	42.60	0.00	0.00	0.00	26.45	26.45	26.45p	19999
2	42.00	0.00	14.76	0.00	82.70	36.95	36.95	19999
3	41.10	0.00	31.56	3.32	146.76	31.33	31.33	19999
4	41.00	0.00	33.38	3.88	153.72	25.08	25.08	19999
5	40.70	0.00	38.84	5.58	174.52	21.45	21.45	19999
6	40.10	0.00	49.72	8.96	216.00	17.67	17.67	19999

(continued)

Stage No.13 Remove strut or anchor no.1 at elevation 40.70

		RIGHT side						
			Effective stresses				Total	Adjusted
Node no.	Y coord	Water press.	Vertic -al	Active limit	Passive limit	Earth press.	earth press.	soil modulus
		kN/m2	kN/m2	kN/m2	kN/m2	kN/m2	kN/m2	kN/m2
7	39.60	0.00	58.77	11.77	250.51	17.02	17.02	19999
8	39.00	0.00	69.64	15.14	291.94	22.40	22.40	19999
		0.00	69.64	13.66	327.06	21.43	21.43	19999
9	38.30	0.00	82.33	17.28	381.47	27.45	27.45	19999
10	37.60	0.00	95.03	20.90	435.93	33.21	33.21	19999
11	36.85	7.50	101.15	22.64	462.17	35.52	43.02	19999
12	36.10	15.00	107.27	24.39	488.42	20.52	35.52A	19999
13	35.10	25.00	115.42	26.71	523.36	22.57	47.57A	19999
14	34.50	31.00	120.30	28.10	544.27	31.33	62.33	19999
		31.00	120.30	16.53	776.89	30.82	61.82	49997
15	33.75	38.50	127.13	18.09	817.02	25.65	64.15	49997
16	33.00	46.00	133.93	19.65	857.03	24.91	70.91	49997
17	32.00	56.00	142.97	21.72	910.16	31.54	87.54	49997
18	31.25	63.50	149.72	23.26	949.86	42.32	105.82	49997
19	30.50	71.00	156.45	24.80	989.43	49.73	120.73	49997
		71.00	156.45	0.00	1750.39	0.68	71.68	149992
20	29.50	81.00	166.40	0.00	1833.72	25.65	106.65	149992
21	28.50	91.00	176.32	0.00	1916.81	67.93	158.93	149992
22	28.40	92.00	177.31	0.00	1925.11	38.43	130.43	149992
23	28.20	94.00	179.29	0.00	1941.70	39.02	133.02	149992
24	26.10	115.00	200.03	0.00	2115.53	46.70	161.70	149992
25	24.00	136.00	220.73	0.00	2288.92	53.92	189.92	149992
26	20.00	176.00	260.10	0.00	2618.78	68.05	244.05	149992

Legend: 2.86 a Soil pressure at active limit
26.45 p Soil pressure at passive limit
47.57 A Arching - soil pressure below active limit

TONKIN + TAYLOR LTD | Sheet No.
Program: WALLAP Version 6.09 Revision A61.B78.R61 | Job No.
Licensed from GEOSOLVE | Made by :
Data filename/Run ID: 20261027_UoA_Section3_Anc_DeflectionEnvelope
New data set - contains default parameters | Date:28-10-2026
Please modify / add | Checked :

Units: kN,m

Stage No.13 Remove prop no.1 at elev. 40.70

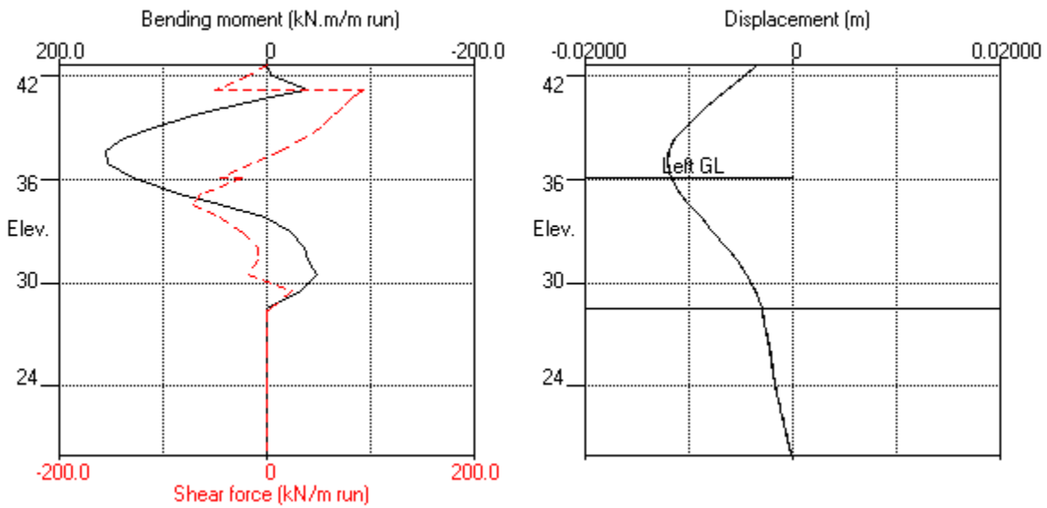

Stage No.13 Remove prop no.1 at elev. 40.70

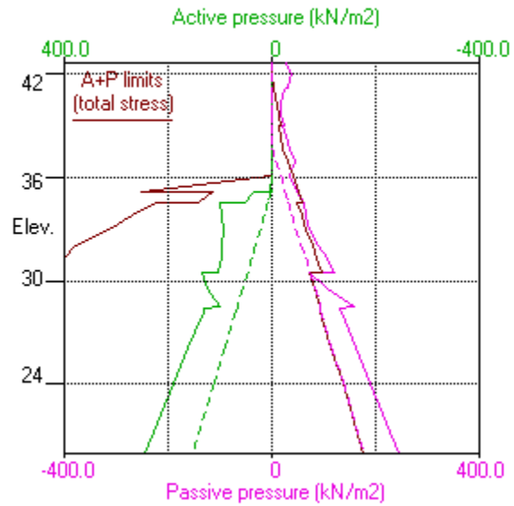

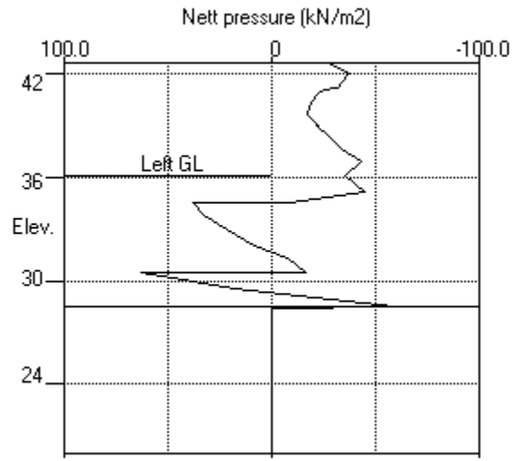

Units: kN,m

Stage No.14 Change EI of wall to 125120kN.m2/m run

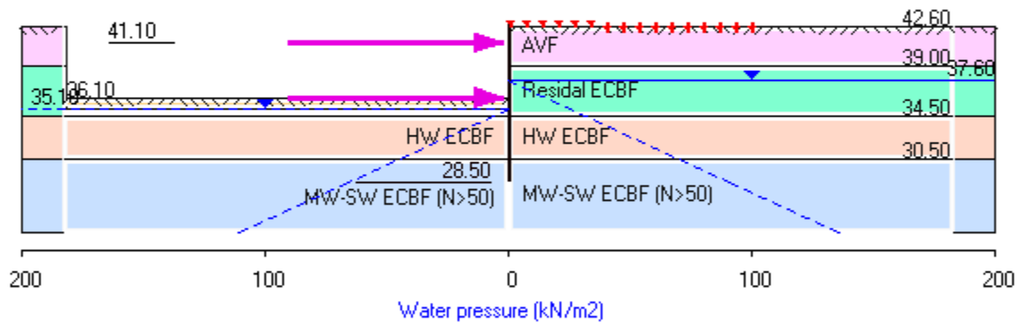

TONKIN + TAYLOR LTD | Sheet No.
Program: WALLAP Version 6.09 Revision A61.B78.R61 | Job No.
Licensed from GEOSOLVE | Made by :
Data filename/Run ID: 20261027_UoA_Section3_Anc_DeflectionEnvelope
New data set - contains default parameters | Date:28-10-2026
Please modify / add | Checked :

Units: kN,m

Stage No. 14 Change EI of wall to 125120 kN.m2/m run
Allow wall to relax with new modulus value

STABILITY ANALYSIS of Fully Embedded Wall according to Strength Factor method
Factor of safety on soil strength

Stage No.	Ground level Act.	Pass.	FoS for toe elev. = 28.50 Prop Elev.	Factor of Safety	Moment equilib. at elev.	Toe elev. for FoS = 1.500 Toe elev.	Wall Penetr -ation	Direction of failure
14	36.10	42.60	More than one prop. No FoS calc.					

BENDING MOMENT and DISPLACEMENT ANALYSIS of Fully Embedded Wall
Analysis options
2-D finite element model. Active limit arching modelled.
Soil deformations are elastic until the active or passive limit is reached
Open Tension Crack analysis - No

Length of wall perpendicular to section = 1000.00m
Rigid boundaries: Left side 40.00m from wall Rough
Right side 40.00m from wall Rough
Lower boundary at elevation 20.00m Rough
Soil-wall interface Smooth

*** Wall displacements reset to zero at stage 3

Warnings concerning changes to wall stiffness
have been ignored. Please review the calculated bending moments
for unexpected values and read the Help Topic

Node no.	Y coord	Nett pressure	Wall disp.	Wall rotation	Shear force	Bending moment	Prop forces	EI of wall
		kN/m2	m	rad.	kN/m	kN.m/m	kN/m	kN.m2/m
1	42.60	-26.45	-0.003	1.93E-03	0.0	0.0		125120
2	42.00	-37.82	-0.005	1.95E-03	-19.3	-5.2		125120
3	41.10	-32.26	-0.006	2.11E-03	-50.8	-39.0	132.3	125120
		-32.26	-0.006	2.11E-03	81.5	-39.0		
4	41.00	-25.84	-0.007	2.13E-03	78.6	-30.8		125120
5	40.70	-21.78	-0.007	2.18E-03	71.4	-7.5		125120
6	40.10	-17.34	-0.009	2.13E-03	59.7	32.8		125120
7	39.60	-15.95	-0.010	1.96E-03	51.4	61.8		125120
8	39.00	-20.75	-0.011	1.62E-03	40.3	90.8		125120
		-19.78	-0.011	1.62E-03	40.3	90.8		
9	38.30	-25.47	-0.012	1.08E-03	24.5	115.2		125120
10	37.60	-31.36	-0.012	4.59E-04	4.6	126.9		125120
11	36.85	-41.79	-0.012	-2.24E-04	-22.8	121.7		125120

12	36.10	-35.21	-0.012	-7.99E-04	-51.7	93.0	44.5	125120
		-35.21	-0.012	-7.99E-04	-7.2	93.0		
13	35.10	-44.72	-0.011	-1.34E-03	-47.1	62.4		125120
		-14.03	-0.011	-1.34E-03	-47.1	62.4		
14	34.50	-9.20	-0.010	-1.52E-03	-54.1	29.1		125120
		35.44	-0.010	-1.52E-03	-54.1	29.1		
15	33.75	28.31	-0.009	-1.58E-03	-30.2	-4.5		125120
16	33.00	16.77	-0.008	-1.49E-03	-13.3	-21.6		125120
17	32.00	4.10	-0.006	-1.30E-03	-2.9	-28.6		125120
18	31.25	-11.03	-0.005	-1.14E-03	-5.5	-30.4		125120
19	30.50	-19.19	-0.004	-9.60E-04	-16.8	-37.8		125120
		53.75	-0.004	-9.60E-04	-16.8	-37.8		

(continued)

Stage No.14 Change EI of wall to 125120 kN.m2/m run
Allow wall to relax with new modulus value

Node no.	Y coord	Nett pressure	Wall disp.	Wall rotation	Shear force	Bending moment	Prop forces	EI of wall
		kN/m2	m	rad.	kN/m	kN.m/m	kN/m	kN.m2/m
20	29.50	14.40	-0.004	-7.25E-04	17.3	-26.5		125120
21	28.50	-44.50	-0.003	-6.28E-04	2.2	-0.0		0
22	28.40	-0.00	-0.003	0	-0.0	0.0		0
23	28.20	-0.06	-0.003	0	-0.0	0.0		0
24	26.10	-0.01	-0.002	0	-0.1	0.0		0
25	24.00	-0.12	-0.002	0	-0.2	0.0		0
26	20.00	0.23	-0.000	0	-0.0	0.0		---

At elev. 41.10 Prop force = 132.3 kN/m run
At elev. 36.10 Prop force = 44.5 kN/m run

LEFT side

Node no.	Y coord	Water press.	Effective stresses: Vertic -al	Active limit	Passive limit	Earth press.	Total earth press.	Adjusted soil modulus
		kN/m2	kN/m2	kN/m2	kN/m2	kN/m2	kN/m2	kN/m2
1	42.60	0.00	0.00	0.00	0.00	0.00	0.00	0.0
2	42.00	0.00	0.00	0.00	0.00	0.00	0.00	0.0
3	41.10	0.00	0.00	0.00	0.00	0.00	0.00	0.0
4	41.00	0.00	0.00	0.00	0.00	0.00	0.00	0.0
5	40.70	0.00	0.00	0.00	0.00	0.00	0.00	0.0
6	40.10	0.00	0.00	0.00	0.00	0.00	0.00	0.0
7	39.60	0.00	0.00	0.00	0.00	0.00	0.00	0.0
8	39.00	0.00	0.00	0.00	0.00	0.00	0.00	0.0
9	38.30	0.00	0.00	0.00	0.00	0.00	0.00	0.0
10	37.60	0.00	0.00	0.00	0.00	0.00	0.00	0.0
11	36.85	0.00	0.00	0.00	0.00	0.00	0.00	0.0
12	36.10	0.00	0.00	0.00	0.00	0.00	0.00	0.0
		0.00	0.00	0.00	0.00	0.00	0.00	149996
13	35.10	0.00	20.00	2.86	251.34	3.02	3.02	149996
		0.00	20.00	0.00	114.23	33.70	33.70	19999
14	34.50	6.00	24.80	0.88	134.82	47.57	53.57	19999
		6.00	24.80	0.00	215.49	92.37	98.37	49999
15	33.75	13.50	31.56	0.00	255.21	81.13	94.63	49999
16	33.00	21.00	38.32	0.00	294.97	69.26	90.26	49999
17	32.00	31.00	47.35	0.00	348.06	62.92	93.92	49999
18	31.25	38.50	54.14	1.38	387.94	58.25	96.75	49999
19	30.50	46.00	60.93	2.94	427.89	57.16	103.16	49999
		46.00	60.93	0.00	950.14	84.31	130.31	149996
20	29.50	56.00	71.02	0.00	1034.61	66.86	122.86	149996
21	28.50	66.00	81.13	0.00	1119.32	40.93	106.93	149996
22	28.40	67.00	82.14	0.00	1127.80	63.46	130.46	149996
23	28.20	69.00	84.17	0.00	1144.78	63.98	132.98	149996
24	26.10	90.00	105.52	0.00	1323.70	71.71	161.71	149996
25	24.00	111.00	127.04	0.00	1503.96	78.81	189.81	149996
26	20.00	151.00	168.50	0.00	1851.35	93.30	244.30	149996

		RIGHT side						
			Effective stresses				Total	Adjusted
Node no.	Y coord	Water press.	Vertic -al	Active limit	Passive limit	Earth press.	earth press.	soil modulus
		kN/m2	kN/m2	kN/m2	kN/m2	kN/m2	kN/m2	kN/m2
1	42.60	0.00	0.00	0.00	26.45	26.45	26.45p	19999
2	42.00	0.00	14.76	0.00	82.70	37.82	37.82	19999
3	41.10	0.00	31.56	3.32	146.76	32.26	32.26	19999
4	41.00	0.00	33.38	3.88	153.72	25.84	25.84	19999

(continued)

Stage No.14 Change EI of wall to 125120 kN.m2/m run
Allow wall to relax with new modulus value

		RIGHT side						
			Effective stresses				Total	Adjusted
Node no.	Y coord	Water press.	Vertic -al	Active limit	Passive limit	Earth press.	earth press.	soil modulus
		kN/m2	kN/m2	kN/m2	kN/m2	kN/m2	kN/m2	kN/m2
5	40.70	0.00	38.84	5.58	174.52	21.78	21.78	19999
6	40.10	0.00	49.72	8.96	216.00	17.34	17.34	19999
7	39.60	0.00	58.77	11.77	250.51	15.95	15.95	19999
8	39.00	0.00	69.64	15.14	291.94	20.75	20.75	19999
		0.00	69.64	13.66	327.06	19.78	19.78	19999
9	38.30	0.00	82.33	17.28	381.47	25.47	25.47	19999
10	37.60	0.00	95.03	20.90	435.93	31.36	31.36	19999
11	36.85	7.50	101.15	22.64	462.17	34.29	41.79	19999
12	36.10	15.00	107.27	24.39	488.42	20.21	35.21A	19999
13	35.10	25.00	115.42	26.71	523.36	22.74	47.74A	19999
14	34.50	31.00	120.30	28.10	544.27	31.77	62.77	19999
		31.00	120.30	16.53	776.89	31.93	62.93	49997
15	33.75	38.50	127.13	18.09	817.02	27.82	66.32	49997
16	33.00	46.00	133.93	19.65	857.03	27.49	73.49	49997
17	32.00	56.00	142.97	21.72	910.16	33.82	89.82	49997
18	31.25	63.50	149.72	23.26	949.86	44.28	107.78	49997
19	30.50	71.00	156.45	24.80	989.43	51.36	122.36	49997
		71.00	156.45	0.00	1750.39	5.57	76.57	149992
20	29.50	81.00	166.40	0.00	1833.72	27.45	108.45	149992
21	28.50	91.00	176.32	0.00	1916.81	60.43	151.43	149992
22	28.40	92.00	177.31	0.00	1925.11	38.46	130.46	149992
23	28.20	94.00	179.29	0.00	1941.70	39.04	133.04	149992
24	26.10	115.00	200.03	0.00	2115.53	46.72	161.72	149992
25	24.00	136.00	220.73	0.00	2288.92	53.94	189.94	149992
26	20.00	176.00	260.10	0.00	2618.78	68.06	244.06	149992

Legend: 12.34 a Soil pressure at active limit
26.45 p Soil pressure at passive limit
47.74 A Arching - soil pressure below active limit

TONKIN + TAYLOR LTD | Sheet No.
Program: WALLAP Version 6.09 Revision A61.B78.R61 | Job No.
Licensed from GEOSOLVE | Made by :
Data filename/Run ID: 20261027_UoA_Section3_Anc_DeflectionEnvelope
New data set - contains default parameters | Date:28-10-2026
Please modify / add | Checked :

Units: kN,m

Stage No.14 Change EI of wall to 125120kN.m2/m run

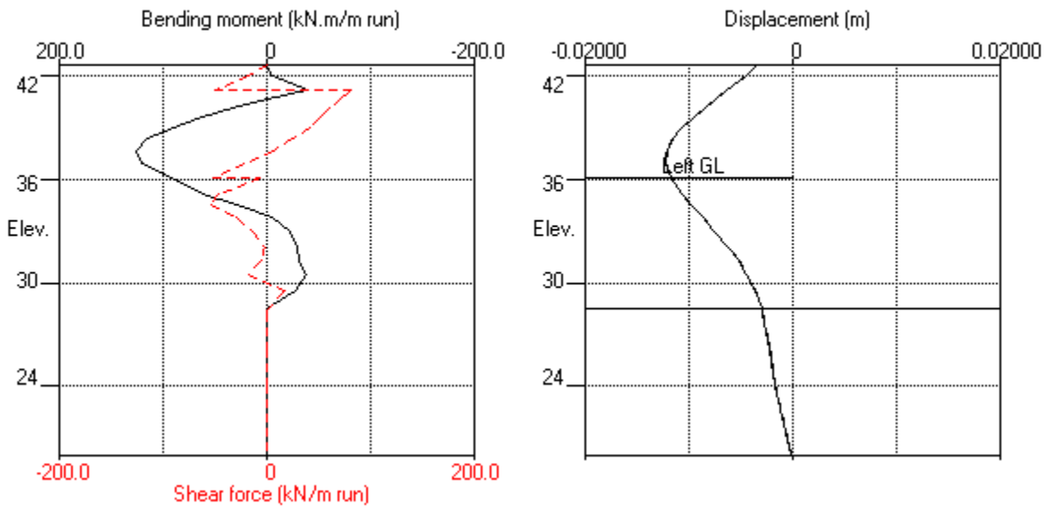

Stage No.14 Change EI of wall to 125120kN.m2/m run

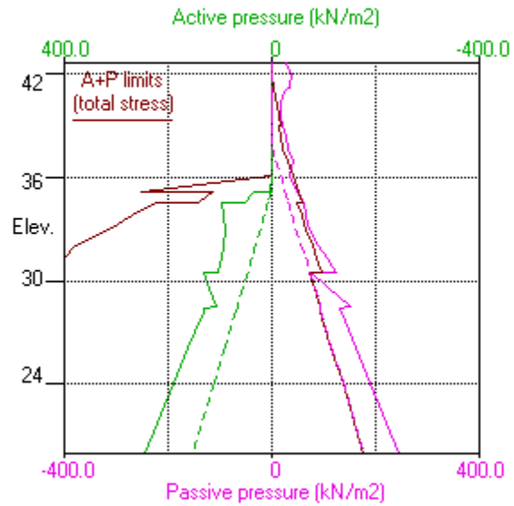

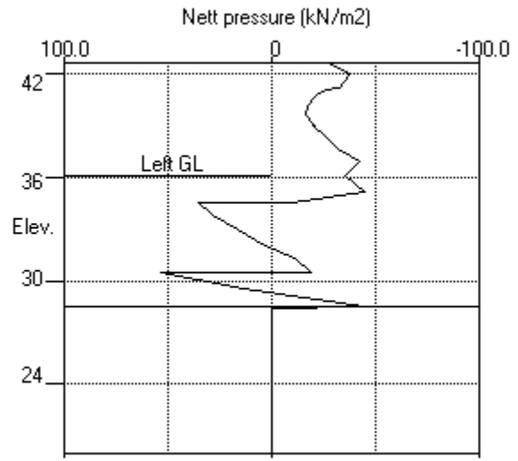

Units: kN,m

Summary of results

STABILITY ANALYSIS of Fully Embedded Wall according to Strength Factor method
Factor of safety on soil strength

Stage No.	Ground level Act.	Ground level Pass.	Prop Elev.	FoS for toe elev. = 28.50: Factor of Safety	FoS for toe elev. = 28.50: Moment equilib. at elev.	Toe elev. for FoS = 1.500: Toe elev.	Toe elev. for FoS = 1.500: Wall Penetr -ation	Direction of failure
1	42.60	42.60	Cant.	Conditions not suitable for FoS calc.				
2	42.60	42.60	Cant.	Conditions not suitable for FoS calc.				
3	42.60	42.60	No analysis at this stage					
4	42.60	42.60	Cant.	Conditions not suitable for FoS calc.				
5	42.60	40.10	Cant.	3.447	29.66	36.77	3.33	R to L
6	42.60	40.10	40.70	Conditions not suitable for FoS calc.				
7	40.10	42.60	No analysis at this stage					
8	42.60	35.10	40.70	2.833	n/a	31.12	3.98	R to L
9	42.60	36.10	40.70	3.598	n/a	33.07	3.03	R to L
10	42.60	36.10	40.70	3.374	n/a	33.57	2.53	R to L
11	36.10	42.60	No analysis at this stage					

All remaining stages have more than one prop - FoS calculation n/a

Minimum required Anchor Free Lengths
This additional information would be given here if the Wedge Analysis option had been selected.

TONKIN + TAYLOR LTD | Sheet No.
Program: WALLAP Version 6.09 Revision A61.B78.R61 | Job No.
Licensed from GEOSOLVE | Made by :
Data filename/Run ID: 20261027_UoA_Section3_Anc_DeflectionEnvelope
New data set - contains default parameters | Date:28-10-2026
Please modify / add | Checked :

Units: kN,m

Summary of results

BENDING MOMENT and DISPLACEMENT ANALYSIS of Fully Embedded Wall
Analysis options
2-D finite element model. Active limit arching modelled.
Soil deformations are elastic until the active or passive limit is reached
Open Tension Crack analysis - No

Length of wall perpendicular to section = 1000.00m

Rigid boundaries:	Left side 40.00m from wall	Rough
	Right side 40.00m from wall	Rough
	Lower boundary at elevation 20.00m	Rough
	Soil-wall interface	Smooth

Warnings concerning changes to wall stiffness
have been ignored. Please review the calculated bending moments for unexpected values and read the Help Topic

Bending moment, shear force and displacement envelopes

Node no.	Y coord	Displacement maximum	Displacement minimum	Bending moment maximum	Bending moment minimum	Shear force maximum	Shear force minimum
		m	m	kN.m/m	kN.m/m	kN/m	kN/m
1	42.60	0.002	-0.012	0.0	-0.0	0.0	0.0
2	42.00	0.001	-0.011	0.1	-5.2	0.9	-19.3
3	41.10	0.001	-0.010	1.7	-39.0	93.0	-50.8
4	41.00	0.001	-0.010	2.0	-42.5	90.1	-51.6
5	40.70	0.000	-0.010	3.2	-59.2	116.7	-61.0
6	40.10	0.000	-0.011	42.1	-12.7	104.4	-10.4
7	39.60	0.000	-0.012	75.5	-10.7	94.0	-5.2
8	39.00	0.000	-0.013	111.4	-12.1	78.9	-0.5
9	38.30	0.000	-0.014	158.7	-11.0	56.3	0.0
10	37.60	0.000	-0.014	188.1	-8.9	32.4	-1.7
11	36.85	0.000	-0.014	194.9	-7.6	4.1	-22.8
12	36.10	0.000	-0.014	171.5	-9.0	0.1	-51.7
13	35.10	0.000	-0.013	114.2	-16.2	0.0	-86.7
14	34.50	0.000	-0.012	62.4	-23.3	0.0	-92.9
15	33.75	0.000	-0.010	9.9	-27.6	0.0	-57.7
16	33.00	0.000	-0.009	0.0	-38.7	4.4	-34.2
17	32.00	0.000	-0.007	0.0	-56.0	5.0	-15.9
18	31.25	0.000	-0.006	0.1	-60.5	2.1	-12.3
19	30.50	0.000	-0.005	0.0	-66.0	0.8	-17.1
20	29.50	0.000	-0.004	0.0	-41.2	32.8	0.0
21	28.50	0.000	-0.003	0.0	-0.0	3.7	0.0
22	28.40	0.000	-0.003	0.0	0.0	0.0	-0.0
23	28.20	0.000	-0.003	0.0	0.0	0.0	-0.0
24	26.10	0.000	-0.002	0.0	0.0	0.0	-0.2
25	24.00	0.000	-0.002	0.0	0.0	0.0	-0.4
26	20.00	0.000	-0.000	0.0	0.0	0.0	-0.0

Summary of results (continued)

Maximum and minimum bending moment and shear force at each stage

Stage no.	Bending moment maximum kN.m/m	elev.	minimum kN.m/m	elev.	Shear force maximum kN/m	elev.	minimum kN/m	elev.
1	0.1	35.10	-0.1	30.50	0.1	36.85	-0.3	30.50
2	0.2	36.10	-0.3	33.75	0.2	33.00	-0.8	34.50
3	No calculation at this stage							
4	10.4	38.30	-6.9	33.75	4.6	40.10	-6.1	36.10
5	0.0	42.60	-27.6	33.75	8.1	29.50	-13.8	34.50
6	57.7	37.60	-58.0	40.70	86.3	40.70	-61.0	40.70
7	No calculation at this stage							
8	177.4	36.85	-60.8	30.50	108.7	40.70	-91.8	34.50
9	194.9	36.85	-66.0	30.50	116.7	40.70	-92.9	34.50
10	162.6	36.85	-59.2	40.70	105.0	40.70	-76.8	34.50
11	No calculation at this stage							
12	No calculation at this stage							
13	155.3	37.60	-47.6	30.50	93.0	41.10	-70.9	34.50
14	126.9	37.60	-39.0	41.10	81.5	41.10	-54.1	34.50

Maximum and minimum displacement at each stage

Stage no.	Displacement maximum m	elev.	minimum m	elev.	Stage description
1	0.000	42.60	-0.000	36.10	Apply surcharge no.1 at elev. 42.00
2	0.000	42.60	-0.001	42.60	Apply surcharge no.2 at elev. 42.60
3	Wall displacements reset to zero Change EI of wall to 187670kN.m2/m run				
4	0.000	42.60	-0.001	39.60	Apply water pressure profile no.2
5	0.000	42.60	-0.012	42.60	Excav. to elev. 40.10 on LEFT side
6	0.002	42.60	-0.002	36.10	Install prop no.1 at elev. 40.70
7	No calculation at this stage				Apply water pressure profile no.1
8	0.000	42.60	-0.013	36.85	Excav. to elev. 35.10 on LEFT side
9	0.000	42.60	-0.014	36.85	Fill to elev. 36.10 on LEFT side
10	0.000	42.60	-0.012	36.85	Apply water pressure profile no.3
11	No calculation at this stage				Install prop no.4 at elev. 36.10
12	No calculation at this stage				Install prop no.3 at elev. 41.10
13	0.000	42.60	-0.012	36.85	Remove prop no.1 at elev. 40.70
14	0.000	42.60	-0.012	36.85	Change EI of wall to 125120kN.m2/m run

Run ID. 20261027_UoA_Section3_Anc_DeflectionEnvelope | Sheet No.
New data set - contains default parameters | Date:28-10-2026
Please modify / add | Checked :

Summary of results (continued)

Prop forces at each stage (horizontal components)

Stage no.	Anchor no. 1 at elev. 40.70 kN/m run	kN/prop	Strut no. 3 at elev. 41.10 kN/m run	kN/prop	Strut no. 4 at elev. 36.10 kN/m run	kN/prop
6	147.31	530.33	---	---	---	---
8	166.89	600.80	---	---	---	---
9	170.64	614.30	---	---	---	---
10	164.18	591.04	---	---	---	---
13	---	---	142.70	142.70	21.31	21.31
14	---	---	132.28	132.28	44.50	44.50

TONKIN + TAYLOR LTD | Sheet No.
Program: WALLAP Version 6.09 Revision A61.B78.R61 | Job No.
Licensed from GEOSOLVE | Made by :
Data filename/Run ID: 20261027_UoA_Section3_Anc_DeflectionEnvelope
New data set - contains default parameters | Date:28-10-2026
Please modify / add | Checked :

Units: kN,m

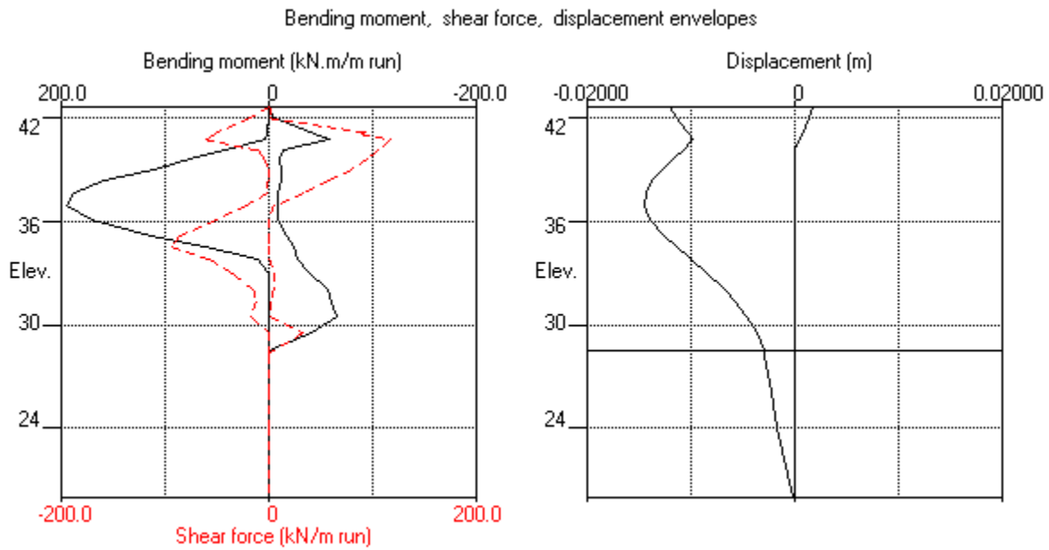

TONKIN + TAYLOR LTD | Sheet No.
Program: WALLAP Version 6.09 Revision A61.B78.R61 | Job No.
Licensed from GEOSOLVE | Made by :
Data filename/Run ID: 20261027_UoA_Section3_Prop_DeflectionEnvelope
New data set - contains default parameters | Date:28-10-2026
Please modify / add | Checked :

Units: kN,m

INPUT DATA

SOIL PROFILE

Stratum no.	Elevation of top of stratum	Soil types Left side		Soil types Right side	
1	42.60	6	AVF	6	AVF
2	39.00	2	Residal ECBF	2	Residal ECBF
3	34.50	3	HW ECBF	3	HW ECBF
4	30.50	4	MW-SW ECBF (N>50)	4	MW-SW ECBF (N>50)

SOIL PROPERTIES

No.	Soil type Description	Bulk density kN/m3	Young's Modulus Eh,kN/m2	At rest coeff. Ko	Consol state. NC/OC	Active limit Ka	Passive limit Kp	Cohesion kN/m2
	(Datum elev.)		(dEh/dy)	(dKo/dy)	(Nu)	(Kac)	(Kpc)	(dc/dy)
1	Fill	17.00	10000	0.530	OC	0.311	3.812	2.000d
				(0.300)		(1.297)	(5.289)	
2	Residal ECBF	18.00	20000	0.500	OC	0.285	4.288	5.000d
				(0.300)		(1.238)	(5.694)	
3	HW ECBF	19.00	50000	0.430	OC	0.229	5.879	10.00d
				(0.250)		(1.101)	(6.968)	
4	MW-SW ECBF (N>50)	20.00	150000	0.360	OC	0.182	8.378	50.00d
				(0.250)		(0.975)	(8.793)	
5	Structural fill	20.00	150000	0.290	OC	0.143	12.57	0.0d
				(0.200)		(0.857)	(11.567)	
6	AVF	18.00	20000	0.530	OC	0.311	3.812	5.000d
				(0.300)		(1.297)	(5.289)	

Additional soil parameters associated with Ka and Kp

No.	Soil type Description	--- parameters for Ka --- Soil friction angle	Wall adhesion coeff.	Back-fill angle	--- parameters for Kp --- Soil friction angle	Wall adhesion coeff.	Back-fill angle
1	Fill	28.00	0.639	0.00	28.00	0.469	0.00
2	Residal ECBF	30.00	0.634	0.00	30.00	0.464	0.00
3	HW ECBF	35.00	0.619	0.00	35.00	0.450	0.00
4	MW-SW ECBF (N>50)	40.00	0.602	0.00	40.00	0.434	0.00
5	Structural fill	45.00	0.581	0.00	45.00	0.414	0.00
6	AVF	28.00	0.639	0.00	28.00	0.469	0.00

GROUND WATER CONDITIONS

Density of water = 10.00 kN/m3
Initial water pressure profile = Profile number 5

Automatic water pressure balancing at toe of wall : No

Water press. profile no.	Left side Point no.	Elev. m	Piezo elev. m	Water press. kN/m2	Right side Point no.	Elev. m	Piezo elev. m	Water press. kN/m2
1	1	35.10	35.10	0.0	1	41.00	41.00	0.0
	2	30.10	34.60	45.0	2	36.50	41.00	45.0
	3	20.00	24.50	45.0	3	20.00	24.50	45.0
2	Not defined							
3	1	35.10	35.10	0.0	1	37.60	37.60	0.0
4	Not defined							
5	1	41.00	41.00	0.0	1	41.00	41.00	0.0
	2	36.50	41.00	45.0	2	36.50	41.00	45.0
	3	20.00	24.50	45.0	3	20.00	24.50	45.0

WALL PROPERTIES

Type of structure = Fully Embedded Wall
Elevation of toe of wall = 28.50
Maximum finite element length = 1.00 m
Youngs modulus of wall E = 10000 kN/m2
Moment of inertia of wall I = 1.0000 m4/m run
E.I = 10000 kN.m2/m run
Yield Moment of wall = Not defined

STRUTS and ANCHORS

Prop no.	Elev.	Prop spacing m	Cross-section area sq.m	Youngs modulus kN/m2	Free length m	Inclin-ation (degs)	Pre-stress /prop kN	Strut or Anchor	Allow tension ?	L/R
1	40.70	3.60	0.020100	2.000E+08	13.00	-25.00	0	Strut	No	L
2	Not defined									
3	41.10	1.00	0.150000	3.000E+07	20.00	0.00	0	Strut	No	L
4	36.10	1.00	0.150000	3.000E+07	20.00	0.00	0	Strut	No	L

SURCHARGE LOADS

Surcharge no.	Elev.	Distance from wall	Length parallel to wall	Width perpend. to wall	Surcharge(kN/m2) Near edge	Far edge	Surcharge Cat.	Part Soil type	Short Q fact.	reduc. fact.
1	42.00	-7.50(R)	15.00	15.00	20.00	=	--	-- --	--	--
2	42.60	-0.10(R)	15.00	7.40	5.00	=	--	-- --	--	--

Note: L = Left side, R = Right side

CONSTRUCTION STAGES

Construction stage no.	Stage description
1	Apply surcharge no.1 at elevation 42.00
2	Apply surcharge no.2 at elevation 42.60

```
 3       Change EI of wall to 187670 kN.m2/m run
         Reset wall displacements to zero at this stage
 4       Apply water pressure profile no.1
         No analysis at this stage
 5       Excavate to elevation 40.60 on LEFT side
         Toe of berm at elevation 35.10
         Width of top of berm = 1.00
         Width of toe of berm = 12.00
 6       Install strut or anchor no.1 at elevation 40.70
 7       Excavate to elevation 35.10 on LEFT side
 8       Fill to elevation 36.10 on LEFT side with soil type 5
 9       Apply water pressure profile no.3
         No analysis at this stage
10       Install strut or anchor no.4 at elevation 36.10
11       Install strut or anchor no.3 at elevation 41.10
12       Remove strut or anchor no.1 at elevation 40.70
13       Change EI of wall to 125120 kN.m2/m run
         Allow wall to relax with new modulus value
```

FACTORS OF SAFETY and ANALYSIS OPTIONS

```
 Stability analysis:
  Method of analysis  -  Strength Factor method
  Factor on soil strength for calculating wall depth = 1.50

 Parameters for undrained strata:
  Minimum equivalent fluid density          =   5.00 kN/m3
  Maximum depth of water filled tension crack  =   0.00 m

 Bending moment and displacement calculation:
  Method  -  2-D finite element model
  Open Tension Crack analysis? - No
  Active limit arching modelled?  -  Yes
  Non-linear Modulus Parameter (L) = 14.10 m

 Boundary conditions:
  Length of wall (normal to plane of analysis) = 1000.00 m

  Width of excavation/fill on Left  side of wall  = 40.00 m
  Width of excavation/fill on Right side of wall  = 40.00 m

  Distance to rigid boundary on Left side  = 40.00 m
  Distance to rigid boundary on Right side = 40.00 m
  Elevation of rigid lower boundary = 20.00

  Lower rigid boundary at elevation 20.00 - Rough
  Rigid boundary on Left side          - Rough
  Rigid boundary on Right side         - Rough
  Soil-wall interface                 - Smooth
```

OUTPUT OPTIONS

Stage no.	Stage description	Output options: Displacement, Bending mom., Shear force	Active, Passive pressures	Graph. output
1	Apply surcharge no.1 at elev. 42.00	Yes	Yes	Yes
2	Apply surcharge no.2 at elev. 42.60	Yes	Yes	Yes
3	Change EI of wall to 187670kN.m2/m run	No	No	No
4	Apply water pressure profile no.1	No	No	No
5	Excav. to elev. 40.60 on LEFT side	Yes	Yes	Yes
6	Install prop no.1 at elev. 40.70	Yes	Yes	Yes
7	Excav. to elev. 35.10 on LEFT side	Yes	Yes	Yes
8	Fill to elev. 36.10 on LEFT side	No	No	No
9	Apply water pressure profile no.3	No	No	No
10	Install prop no.4 at elev. 36.10	Yes	Yes	Yes
11	Install prop no.3 at elev. 41.10	Yes	Yes	Yes
12	Remove prop no.1 at elev. 40.70	Yes	Yes	Yes
13	Change EI of wall to 125120kN.m2/m run	No	No	No
*	Summary output	Yes	-	Yes

Program WALLAP - Copyright (C) 2026 by DL Borin, distributed by GEOSOLVE

150 St. Alphonsus Road, London SW4 7BW, UK www.geosolve.co.uk

Units: kN,m

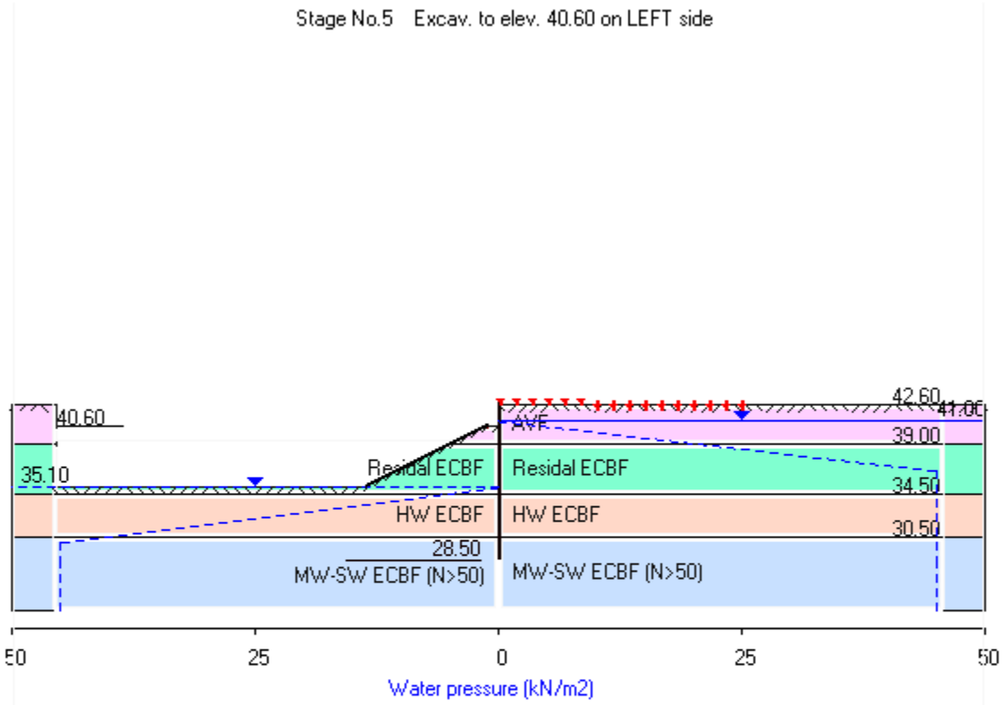

TONKIN + TAYLOR LTD | Sheet No.
Program: WALLAP Version 6.09 Revision A61.B78.R61 | Job No.
Licensed from GEOSOLVE | Made by :
Data filename/Run ID: 20261027_UoA_Section3_Prop_DeflectionEnvelope
New data set - contains default parameters | Date:28-10-2026
Please modify / add | Checked :

Units: kN,m

Stage No. 5 Excavate to elevation 40.60 on LEFT side
Toe of berm at elevation 35.10
Width of top of berm = 1.00
Width of toe of berm = 12.00

STABILITY ANALYSIS of Fully Embedded Wall according to Strength Factor method
Factor of safety on soil strength

Stage No.	Ground level Act.	Ground level Pass.	Prop Elev.	FoS for toe elev. = 28.50 Factor of Safety	FoS for toe elev. = 28.50 Moment equilib. at elev.	Toe elev. for FoS = 1.500 Toe elev.	Toe elev. for FoS = 1.500 Wall Penetr-ation	Direction of failure
5	42.60	40.60	Cant.	2.024	29.49	33.28	7.32	R to L

BENDING MOMENT and DISPLACEMENT ANALYSIS of Fully Embedded Wall
Analysis options
2-D finite element model. Active limit arching modelled.
Soil deformations are elastic until the active or passive limit is reached
Open Tension Crack analysis - No

Length of wall perpendicular to section = 1000.00m
Rigid boundaries: Left side 40.00m from wall Rough
Right side 40.00m from wall Rough
Lower boundary at elevation 20.00m Rough
Soil-wall interface Smooth

*** Wall displacements reset to zero at stage 3

Warnings concerning changes to wall stiffness
have been ignored. Please review the calculated bending moments
for unexpected values and read the Help Topic

Node no.	Y coord	Nett pressure	Wall disp.	Wall rotation	Shear force	Bending moment	Prop forces	EI of wall
		kN/m2	m	rad.	kN/m	kN.m/m	kN/m	kN.m2/m
1	42.60	-0.00	-0.011	-6.40E-04	0.0	-0.0		187670
2	42.00	0.00	-0.010	-6.39E-04	-0.0	-0.5		187670
3	41.10	-3.32	-0.010	-6.34E-04	-1.5	-1.7		187670
4	41.00	-3.88	-0.010	-6.33E-04	-1.9	-1.8		187670
5	40.70	-7.65	-0.009	-6.29E-04	-3.6	-2.6		187670
6	40.60	-8.90	-0.009	-6.28E-04	-4.4	-3.0		187670
		7.53	-0.009	-6.28E-04	-4.4	-3.0		
7	39.80	9.49	-0.009	-6.11E-04	2.4	-4.6		187670
8	39.00	5.71	-0.008	-6.01E-04	8.5	-0.2		187670
		5.53	-0.008	-6.01E-04	8.5	-0.2		
9	38.30	1.17	-0.008	-6.13E-04	10.8	6.8		187670
10	37.60	-3.40	-0.008	-6.52E-04	10.0	14.3		187670
11	36.85	-8.66	-0.007	-7.21E-04	5.5	20.5		187670
12	36.10	-12.74	-0.006	-8.05E-04	-2.5	22.0		187670
13	35.10	-15.53	-0.006	-8.98E-04	-16.6	13.1		187670
14	34.50	-15.62	-0.005	-9.20E-04	-26.0	0.5		187670
		21.70	-0.005	-9.20E-04	-26.0	0.5		
15	33.75	13.27	-0.004	-8.97E-04	-12.9	-12.4		187670
16	33.00	4.27	-0.004	-8.37E-04	-6.3	-17.9		187670
17	32.00	0.51	-0.003	-7.33E-04	-3.9	-21.1		187670
18	31.25	-2.81	-0.002	-6.45E-04	-4.8	-23.4		187670
19	30.50	-0.74	-0.002	-5.43E-04	-6.1	-27.3		187670
		30.18	-0.002	-5.43E-04	-6.1	-27.3		

(continued)

Stage No.5 Excavate to elevation 40.60 on LEFT side
Toe of berm at elevation 35.10
Width of top of berm = 1.00
Width of toe of berm = 12.00

Node no.	Y coord	Nett pressure	Wall disp.	Wall rotation	Shear force	Bending moment	Prop forces	EI of wall
		kN/m2	m	rad.	kN/m	kN.m/m	kN/m	kN.m2/m
20	29.50	8.93	-0.001	-4.23E-04	13.5	-17.9		187670
21	28.50	-32.60	-0.001	-3.76E-04	1.6	0.0		0
22	28.40	-0.00	-0.001	0	-0.0	0.0		0
23	28.20	-0.05	-0.001	0	-0.0	0.0		0
24	26.10	-0.01	-0.001	0	-0.1	0.0		0
25	24.00	-0.07	-0.001	0	-0.1	0.0		0
26	20.00	0.14	-0.000	0	-0.0	0.0		---

LEFT side

Node no.	Y coord	Effective stresses: Water press.	Vertic -al	Active limit	Passive limit	Earth press.	Total earth press.	Adjusted soil modulus
		kN/m2	kN/m2	kN/m2	kN/m2	kN/m2	kN/m2	kN/m2
1	42.60	0.00	0.00	0.00	0.00	0.00	0.00	0.0
2	42.00	0.00	0.00	0.00	0.00	0.00	0.00	0.0
3	41.10	0.00	0.00	0.00	0.00	0.00	0.00	0.0
4	41.00	0.00	0.00	0.00	0.00	0.00	0.00	0.0
5	40.70	0.00	0.00	0.00	0.00	0.00	0.00	0.0
6	40.60	0.00	0.00	0.00	0.00	0.00	0.00	0.0
		0.00	0.00	0.00	16.43b	16.43	16.43p	19999
7	39.80	0.00	14.40	0.00	41.17b	28.41	28.41	19999
8	39.00	0.00	28.80	2.46	53.27b	34.84	34.84	19999
		0.00	28.80	2.02	55.87b	33.49	33.49	19999
9	38.30	0.00	41.40	5.61	71.23b	39.00	39.00	19999
10	37.60	0.00	54.01	9.20	82.80b	44.48	44.48	19999
11	36.85	0.00	67.51	13.05	98.44b	50.16	50.16	19999
12	36.10	0.00	81.02	16.90	113.70b	55.58	55.58	19999
13	35.10	0.00	99.04	22.04	132.84b	63.15	63.15	19999
14	34.50	5.40	104.45	23.58	134.28b	64.54	69.94	19999
		5.40	104.45	12.90	429.31b	76.00	81.40	49998
15	33.75	12.15	111.97	14.62	367.58b	73.32	85.47	49998
16	33.00	18.90	119.50	16.34	312.55b	70.41	89.31	49998
17	32.00	27.90	129.54	18.64	363.10b	70.67	98.57	49998
18	31.25	34.65	137.08	20.37	411.73b	70.60	105.25	49998
19	30.50	41.40	144.63	22.10	444.92b	73.17	114.57	49998
		41.40	144.63	0.00	1651.34	76.52	117.92	149993
20	29.50	45.00	161.10	0.00	1502.94	70.60	115.60	149993
21	28.50	45.00	181.18	0.00	1331.04b	57.00	102.00	149993
22	28.40	45.00	183.19	0.00	1348.68b	74.00	119.00	149993
23	28.20	45.00	187.21	0.00	1425.68b	75.39	120.39	149993
24	26.10	45.00	229.43	0.00	1729.90b	90.48	135.48	149993
25	24.00	45.00	271.70	0.72	2118.10b	105.52	150.52	149993
26	20.00	45.00	352.37	15.40	2693.91b	134.42	179.42	149993

RIGHT side

Node no.	Y coord	Effective stresses: Water press.	Vertic -al	Active limit	Passive limit	Earth press.	Total earth press.	Adjusted soil modulus
		kN/m2	kN/m2	kN/m2	kN/m2	kN/m2	kN/m2	kN/m2
1	42.60	0.00	0.00	0.00	26.45	0.00	0.00a	19999
2	42.00	0.00	14.76	0.00	82.70	0.00	0.00a	19999
3	41.10	0.00	31.56	3.32	146.76	3.32	3.32a	19999
4	41.00	0.00	33.38	3.88	153.72	3.88	3.88a	19999

(continued)

Stage No.5 Excavate to elevation 40.60 on LEFT side
Toe of berm at elevation 35.10
Width of top of berm = 1.00
Width of toe of berm = 12.00

RIGHT side

Node no.	Y coord	Effective stresses: Water press.	Vertic -al	Active limit	Passive limit	Earth press.	Total earth press.	Adjusted soil modulus
		kN/m2	kN/m2	kN/m2	kN/m2	kN/m2	kN/m2	kN/m2
5	40.70	3.00	35.84	4.65	163.09	4.65	7.65a	19999
6	40.60	4.00	36.66	4.90	166.20	4.90	8.90a	19999
7	39.80	12.00	43.15	6.92	190.96	6.92	18.92a	19999
8	39.00	20.00	49.64	8.93	215.69	9.13	29.13	19999
		20.00	49.64	7.96	241.31	7.96	27.96a	19999
9	38.30	27.00	55.33	9.58	265.70	10.83	37.83	19999
10	37.60	34.00	61.03	11.21	290.15	13.87	47.87	19999
11	36.85	41.50	67.15	12.95	316.39	17.32	58.82	19999
12	36.10	45.00	77.27	15.84	359.79	23.32	68.32	19999
13	35.10	45.00	95.42	21.01	437.60	33.68	78.68	19999
14	34.50	45.00	106.30	24.11	484.24	40.56	85.56	19999
		45.00	106.30	13.32	694.58	14.70	59.70	49997
15	33.75	45.00	120.63	16.60	778.81	27.20	72.20	49997
16	33.00	45.00	134.93	19.88	862.91	40.04	85.04	49997
17	32.00	45.00	153.97	24.23	974.83	53.05	98.05	49997
18	31.25	45.00	168.22	27.50	1058.61	63.06	108.06	49997
19	30.50	45.00	182.45	30.75	1142.28	70.31	115.31	49997
		45.00	182.45	0.00	1968.22	42.74	87.74	149992
20	29.50	45.00	202.40	0.00	2135.32	61.67	106.67	149992
21	28.50	45.00	222.32	0.00	2302.20	89.60	134.60	149992
22	28.40	45.00	224.31	0.00	2318.87	74.00	119.00	149992
23	28.20	45.00	228.29	0.00	2352.22	75.44	120.44	149992
24	26.10	45.00	270.03	0.42	2701.99	90.49	135.49	149992
25	24.00	45.00	311.73	8.01	3051.32	105.59	150.59	149992
26	20.00	45.00	391.10	22.46	3716.30	134.28	179.28	149992

Legend: 27.96 a Soil pressure at active limit
16.43 p Soil pressure at passive limit
2693.91 b Passive limit reduced because of berm

Units: kN,m

Stage No.5 Excav. to elev. 40.60 on LEFT side

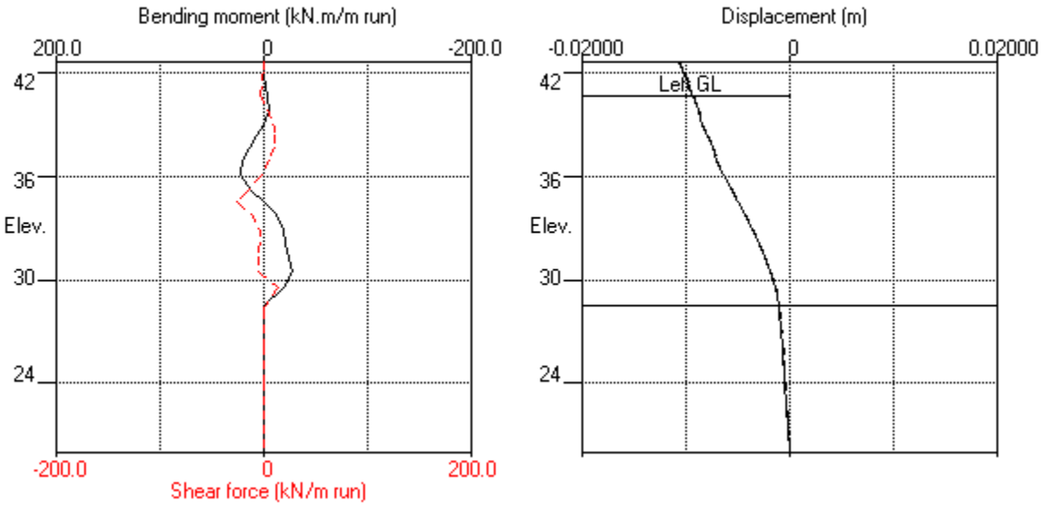

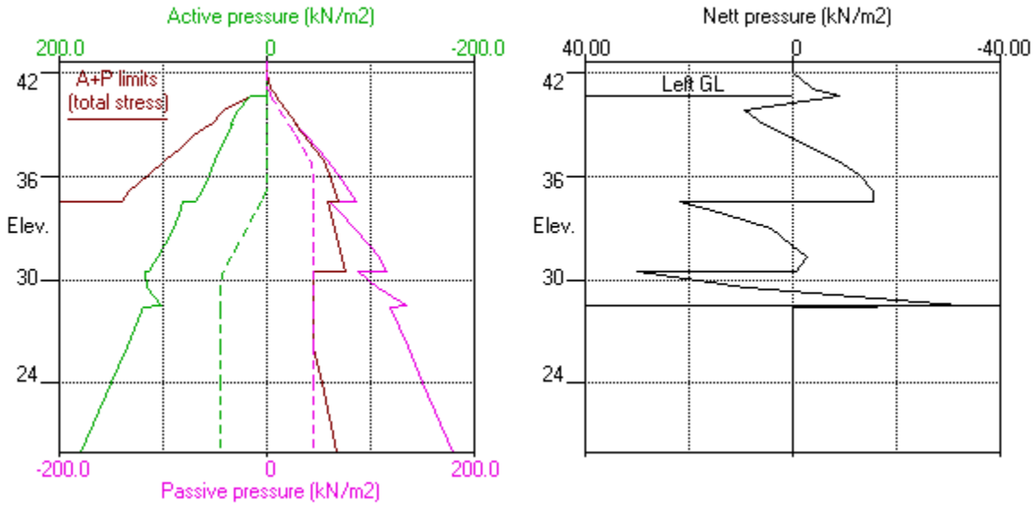

Units: kN,m

Stage No.7 Excav. to elev. 35.10 on LEFT side

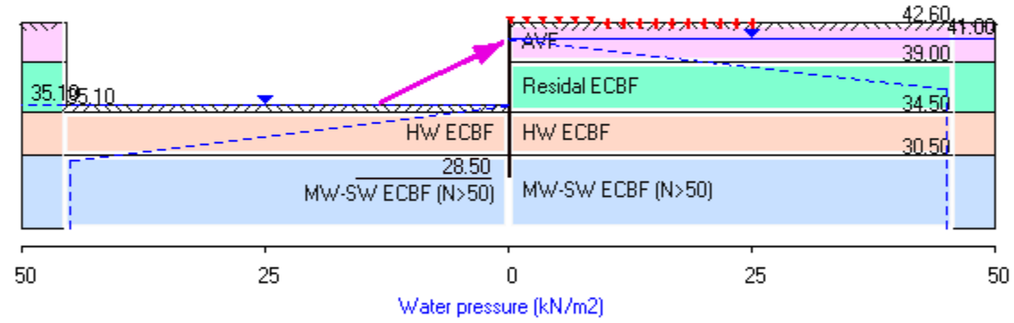

TONKIN + TAYLOR LTD | Sheet No.
Program: WALLAP Version 6.09 Revision A61.B78.R61 | Job No.
Licensed from GEOSOLVE | Made by :
Data filename/Run ID: 20261027_UoA_Section3_Prop_DeflectionEnvelope
New data set - contains default parameters | Date:28-10-2026
Please modify / add | Checked :

Units: kN,m

Stage No. 7 Excavate to elevation 35.10 on LEFT side

STABILITY ANALYSIS of Fully Embedded Wall according to Strength Factor method
Factor of safety on soil strength

Stage No.	Ground level Act.	Pass.	Prop Elev.	Factor of Safety	Moment equilib. at elev.	Toe elev.	Wall Penetr -ation	Direction of failure
			FoS for toe elev. = 28.50			**Toe elev. for FoS = 1.500**		
7	42.60	35.10	40.70	2.833	n/a	31.12	3.98	R to L

BENDING MOMENT and DISPLACEMENT ANALYSIS of Fully Embedded Wall
Analysis options
2-D finite element model. Active limit arching modelled.
Soil deformations are elastic until the active or passive limit is reached
Open Tension Crack analysis - No

Length of wall perpendicular to section = 1000.00m

Rigid boundaries: Left side 40.00m from wall Rough
Right side 40.00m from wall Rough
Lower boundary at elevation 20.00m Rough
Soil-wall interface Smooth

*** Wall displacements reset to zero at stage 3

Warnings concerning changes to wall stiffness
have been ignored. Please review the calculated bending moments
for unexpected values and read the Help Topic

Node no.	Y coord	Nett pressure kN/m2	Wall disp. m	Wall rotation rad.	Shear force kN/m	Bending moment kN.m/m	Prop forces kN/m	EI of wall kN.m2/m
1	42.60	-26.45	-0.008	1.73E-03	0.0	-0.0		187670
2	42.00	-24.41	-0.009	1.74E-03	-15.3	-5.2		187670
3	41.10	-20.51	-0.011	1.82E-03	-35.5	-30.0		187670
4	41.00	-15.82	-0.011	1.84E-03	-37.3	-33.7		187670
5	40.70	-17.50	-0.011	1.90E-03	-42.3	-45.7	142.2	187670
		-17.50	-0.011	1.90E-03	99.9	-45.7		
6	40.60	-13.13	-0.012	1.92E-03	98.4	-35.8		187670
7	39.80	-14.76	-0.013	1.92E-03	87.2	37.0		187670
8	39.00	-20.00	-0.015	1.63E-03	73.3	100.8		187670
9	38.30	-27.00	-0.016	1.17E-03	56.9	146.5		187670
10	37.60	-34.00	-0.016	5.64E-04	35.5	178.9		187670
11	36.85	-41.50	-0.016	-1.81E-04	7.2	195.0		187670
12	36.10	-53.91	-0.016	-9.46E-04	-28.6	188.0		187670
13	35.10	-66.01	-0.015	-1.79E-03	-88.6	131.2		187670
		-37.54	-0.015	-1.79E-03	-88.6	131.2		
14	34.50	-16.55	-0.013	-2.11E-03	-104.8	71.5		187670
		48.50	-0.013	-2.11E-03	-104.8	71.5		
15	33.75	43.25	-0.012	-2.27E-03	-70.4	7.0		187670
16	33.00	29.71	-0.010	-2.22E-03	-43.0	-33.2		187670
17	32.00	18.93	-0.008	-1.97E-03	-18.7	-60.4		187670
18	31.25	0.07	-0.007	-1.71E-03	-11.6	-68.7		187670
19	30.50	-5.30	-0.005	-1.42E-03	-13.5	-76.9		187670
		82.61	-0.005	-1.42E-03	-13.5	-76.9		
20	29.50	20.94	-0.004	-1.09E-03	38.2	-48.7		187670
21	28.50	-88.57	-0.003	-9.63E-04	4.4	0.0		0
22	28.40	-0.00	-0.003	0	-0.0	0.0		0

Run ID. 20261027_UoA_Section3_Prop_DeflectionEnvelope | Sheet No.
New data set - contains default parameters | Date:28-10-2026
Please modify / add | Checked :

(continued)

Stage No.7 Excavate to elevation 35.10 on LEFT side

Node no.	Y coord	Nett pressure kN/m2	Wall disp. m	Wall rotation rad.	Shear force kN/m	Bending moment kN.m/m	Prop forces kN/m	EI of wall kN.m2/m
23	28.20	-0.06	-0.003	0	-0.0	0.0		0
24	26.10	-0.01	-0.002	0	-0.1	0.0		0
25	24.00	-0.12	-0.002	0	-0.2	0.0		0
26	20.00	0.24	-0.000	0	-0.0	0.0		---
At elev. 40.70			Prop force =		142.2 kN/m run (horiz.)			
			=		156.9 kN/m run (inclined)			

LEFT side

Node no.	Y coord	Water press. kN/m2	Effective stresses Vertic -al kN/m2	Active limit kN/m2	Passive limit kN/m2	Earth press. kN/m2	Total earth press. kN/m2	Adjusted soil modulus kN/m2
1	42.60	0.00	0.00	0.00	0.00	0.00	0.00	0.0
2	42.00	0.00	0.00	0.00	0.00	0.00	0.00	0.0
3	41.10	0.00	0.00	0.00	0.00	0.00	0.00	0.0
4	41.00	0.00	0.00	0.00	0.00	0.00	0.00	0.0
5	40.70	0.00	0.00	0.00	0.00	0.00	0.00	0.0
6	40.60	0.00	0.00	0.00	0.00	0.00	0.00	0.0
7	39.80	0.00	0.00	0.00	0.00	0.00	0.00	0.0
8	39.00	0.00	0.00	0.00	0.00	0.00	0.00	0.0
9	38.30	0.00	0.00	0.00	0.00	0.00	0.00	0.0
10	37.60	0.00	0.00	0.00	0.00	0.00	0.00	0.0
11	36.85	0.00	0.00	0.00	0.00	0.00	0.00	0.0
12	36.10	0.00	0.00	0.00	0.00	0.00	0.00	0.0
13	35.10	0.00	0.00	0.00	0.00	0.00	0.00	0.0
		0.00	0.00	0.00	28.47	28.47	28.47p	19999
14	34.50	5.40	5.40	0.00	51.63	47.16	52.56	19999
		5.40	5.40	0.00	101.42	101.42	106.82p	49999
15	33.75	12.15	12.90	0.00	145.53	92.71	104.86	49999
16	33.00	18.90	20.41	0.00	189.65	75.68	94.58	49999
17	32.00	27.90	30.43	0.00	248.55	64.42	92.32	49999
18	31.25	34.65	37.95	0.00	292.78	56.02	90.67	49999
19	30.50	41.40	45.49	0.00	337.08	54.72	96.12	49999
		41.40	45.49	0.00	820.72	87.27	128.67	149996
20	29.50	45.00	61.95	0.00	958.69	61.34	106.34	149996
21	28.50	45.00	82.05	0.00	1127.05	13.64	58.64	149996
22	28.40	45.00	84.06	0.00	1143.90	58.59	103.59	149996
23	28.20	45.00	88.08	0.00	1177.61	59.91	104.91	149996
24	26.10	45.00	130.42	0.00	1532.26	74.77	119.77	149996
25	24.00	45.00	172.92	0.00	1888.36	89.46	134.46	149996
26	20.00	45.00	254.43	0.00	2571.21	118.25	163.25	149996

RIGHT side

Node	Y	Water	Effective stresses Vertic	Active	Passive	Earth	Total earth	Adjusted soil

no.	coord	press. kN/m2	-al kN/m2	limit kN/m2	limit kN/m2	press. kN/m2	press. kN/m2	modulus kN/m2
1	42.60	0.00	0.00	0.00	26.45	26.45	26.45p	19999
2	42.00	0.00	14.76	0.00	82.70	24.41	24.41	19999
3	41.10	0.00	31.56	3.32	146.76	20.51	20.51	19999
4	41.00	0.00	33.38	3.88	153.72	15.82	15.82	19999
5	40.70	3.00	35.84	4.65	163.09	14.50	17.50	19999
6	40.60	4.00	36.66	4.90	166.20	9.13	13.13	19999
7	39.80	12.00	43.15	6.92	190.96	2.76	14.76A	19999
8	39.00	20.00	49.64	8.93	215.69	0.00	20.00A	19999
		20.00	49.64	7.96	241.31	0.00	20.00A	19999

(continued)

Stage No.7 Excavate to elevation 35.10 on LEFT side

		RIGHT side						
			Effective stresses				Total	Adjusted
Node no.	Y coord	Water press.	Vertic -al	Active limit	Passive limit	Earth press.	earth press.	soil modulus
		kN/m2	kN/m2	kN/m2	kN/m2	kN/m2	kN/m2	kN/m2
9	38.30	27.00	55.33	9.58	265.70	0.00	27.00A	19999
10	37.60	34.00	61.03	11.21	290.15	0.00	34.00A	19999
11	36.85	41.50	67.15	12.95	316.39	0.00	41.50A	19999
12	36.10	45.00	77.27	15.84	359.79	8.91	53.91A	19999
13	35.10	45.00	95.42	21.01	437.60	21.01	66.01a	19999
14	34.50	45.00	106.30	24.11	484.24	24.11	69.11a	19999
		45.00	106.30	13.32	694.58	13.32	58.32a	49997
15	33.75	45.00	120.63	16.60	778.81	16.60	61.60a	49997
16	33.00	45.00	134.93	19.88	862.91	19.88	64.88a	49997
17	32.00	45.00	153.97	24.23	974.83	28.39	73.39	49997
18	31.25	45.00	168.22	27.50	1058.61	45.60	90.60	49997
19	30.50	45.00	182.45	30.75	1142.28	56.42	101.42	49997
		45.00	182.45	0.00	1968.22	1.06	46.06	149992
20	29.50	45.00	202.40	0.00	2135.32	40.41	85.41	149992
21	28.50	45.00	222.32	0.00	2302.20	102.21	147.21	149992
22	28.40	45.00	224.31	0.00	2318.87	58.60	103.60	149992
23	28.20	45.00	228.29	0.00	2352.22	59.97	104.97	149992
24	26.10	45.00	270.03	0.42	2701.99	74.78	119.78	149992
25	24.00	45.00	311.73	8.01	3051.32	89.59	134.59	149992
26	20.00	45.00	391.10	22.46	3716.30	118.01	163.01	149992

Legend: 64.88 a Soil pressure at active limit
26.45 p Soil pressure at passive limit
53.91 A Arching - soil pressure below active limit

Units: kN,m

Stage No.7 Excav. to elev. 35.10 on LEFT side

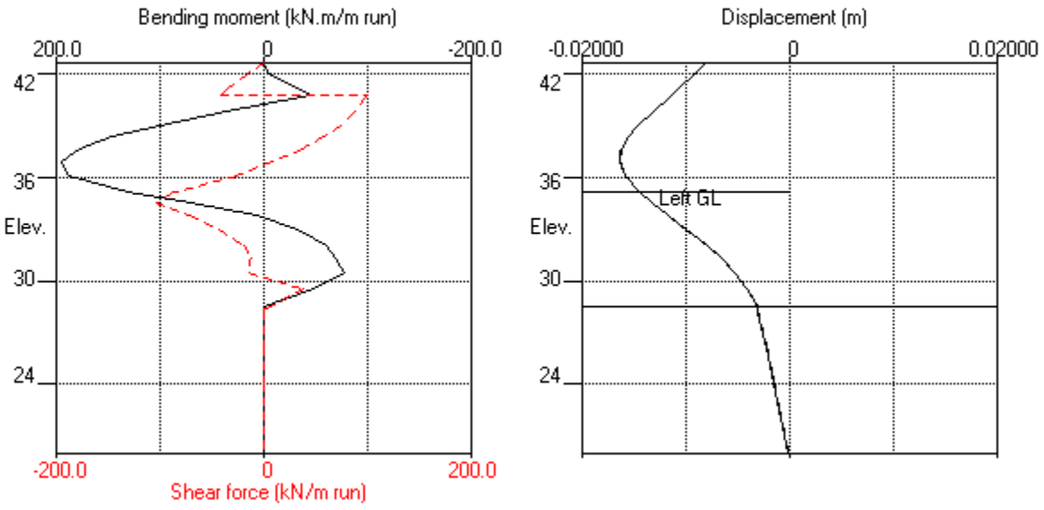

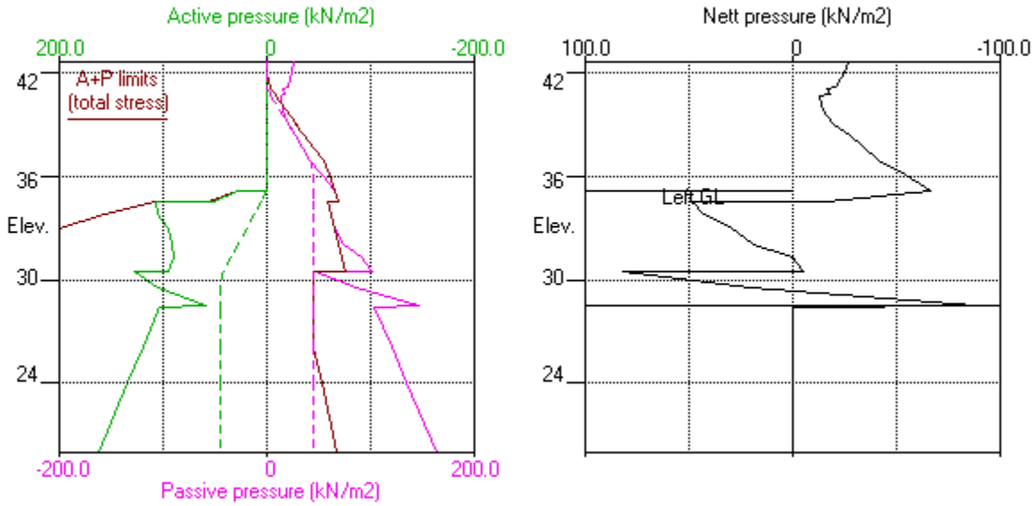

Units: kN,m

Stage No.8 Fill to elev. 36.10 on LEFT side

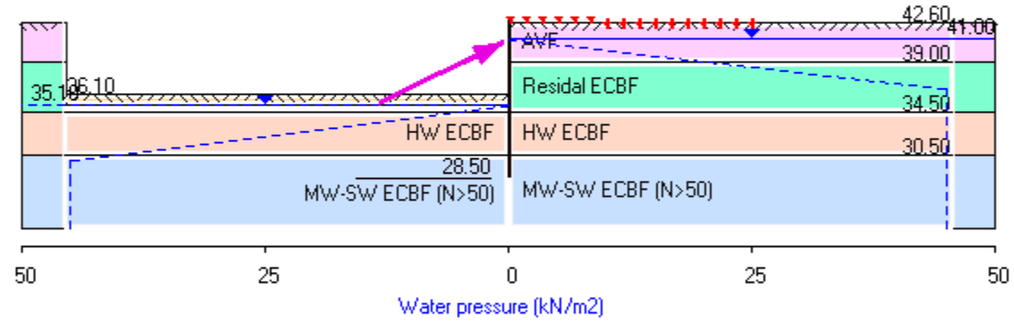

TONKIN + TAYLOR LTD | Sheet No.
Program: WALLAP Version 6.09 Revision A61.B78.R61 | Job No.
Licensed from GEOSOLVE | Made by :
Data filename/Run ID: 20261027_UoA_Section3_Prop_DeflectionEnvelope
New data set - contains default parameters | Date:28-10-2026
Please modify / add | Checked :

Units: kN,m

Stage No. 8 Fill to elevation 36.10 on LEFT side with soil type 5

STABILITY ANALYSIS of Fully Embedded Wall according to Strength Factor method
Factor of safety on soil strength

Stage No.	Ground level Act.	Pass.	Prop Elev.	Factor of Safety	Moment equilib. at elev.	**FoS for toe elev. = 28.50** Toe elev.	**Toe elev. for FoS = 1.500** Wall Penetr -ation	Direction of failure
8	42.60	36.10	40.70	3.598	n/a	33.07	3.03	R to L

BENDING MOMENT and DISPLACEMENT ANALYSIS of Fully Embedded Wall
Analysis options
2-D finite element model. Active limit arching modelled.
Soil deformations are elastic until the active or passive limit is reached
Open Tension Crack analysis - No

Length of wall perpendicular to section = 1000.00m
Rigid boundaries: Left side 40.00m from wall Rough
Right side 40.00m from wall Rough
Lower boundary at elevation 20.00m Rough
Soil-wall interface Smooth

*** Wall displacements reset to zero at stage 3

Warnings concerning changes to wall stiffness
have been ignored. Please review the calculated bending moments
for unexpected values and read the Help Topic

Node no.	Y coord	Nett pressure kN/m2	Wall disp. m	Wall rotation rad.	Shear force kN/m	Bending moment kN.m/m	Prop forces kN/m	EI of wall kN.m2/m
1	42.60	-25.24	-0.008	1.65E-03	0.0	-0.0		187670
2	42.00	-23.38	-0.009	1.66E-03	-14.6	-5.0		187670
3	41.10	-19.66	-0.011	1.74E-03	-34.0	-28.8		187670
4	41.00	-15.09	-0.011	1.75E-03	-35.7	-32.3		187670
5	40.70	-16.82	-0.011	1.81E-03	-40.5	-43.7	138.9	187670
		-16.82	-0.011	1.81E-03	98.5	-43.7		
6	40.60	-12.59	-0.012	1.83E-03	97.0	-34.0		187670
7	39.80	-14.44	-0.013	1.83E-03	86.2	37.8		187670
8	39.00	-20.00	-0.014	1.53E-03	72.4	100.9		187670
9	38.30	-27.26	-0.015	1.07E-03	55.8	145.9		187670
10	37.60	-34.53	-0.016	4.73E-04	34.2	177.6		187670
11	36.85	-42.31	-0.016	-2.65E-04	5.4	192.6		187670
12	36.10	-55.42	-0.016	-1.01E-03	-31.2	184.0		187670
13	35.10	-64.53	-0.014	-1.83E-03	-91.2	124.7		187670
						-31.15	-0.014	-1.83E-03	-91.2	124.7		
14	34.50	-10.44	-0.013	-2.14E-03	-103.7	64.5		187670
						49.01	-0.013	-2.14E-03	-103.7	64.5		
15	33.75	43.45	-0.011	-2.27E-03	-69.0	0.9		187670
16	33.00	29.87	-0.010	-2.19E-03	-41.5	-38.2		187670
17	32.00	19.58	-0.007	-1.92E-03	-16.8	-63.8		187670
18	31.25	1.43	-0.006	-1.65E-03	-8.9	-70.4		187670
19	30.50	-2.93	-0.005	-1.36E-03	-9.5	-76.3		187670
						76.34	-0.005	-1.36E-03	-9.5	-76.3		
20	29.50	18.52	-0.004	-1.03E-03	37.9	-47.2		187670
21	28.50	-85.83	-0.003	-9.12E-04	4.3	0.0		0
22	28.40	-0.00	-0.003	0	-0.0	0.0		0

Run ID. 20261027_UoA_Section3_Prop_DeflectionEnvelope | Sheet No.
New data set - contains default parameters | Date:28-10-2026
Please modify / add | Checked :

(continued)

Stage No.8 Fill to elevation 36.10 on LEFT side with soil type 5

Node no.	Y coord	Nett pressure	Wall disp.	Wall rotation	Shear force	Bending moment	Prop forces	EI of wall
		kN/m2	m	rad.	kN/m	kN.m/m	kN/m	kN.m2/m
23	28.20	-0.06	-0.003	0	-0.0	0.0		0
24	26.10	-0.01	-0.002	0	-0.1	0.0		0
25	24.00	-0.12	-0.001	0	-0.2	0.0		0
26	20.00	0.23	-0.000	0	-0.0	0.0		---

At elev. 40.70 Prop force = 138.9 kN/m run (horiz.)
= 153.3 kN/m run (inclined)

LEFT side

Node no.	Y coord	Effective stresses: Water press.	Vertic -al	Active limit	Passive limit	Earth press.	Total earth press.	Adjusted soil modulus
		kN/m2	kN/m2	kN/m2	kN/m2	kN/m2	kN/m2	kN/m2
1	42.60	0.00	0.00	0.00	0.00	0.00	0.00	0.0
2	42.00	0.00	0.00	0.00	0.00	0.00	0.00	0.0
3	41.10	0.00	0.00	0.00	0.00	0.00	0.00	0.0
4	41.00	0.00	0.00	0.00	0.00	0.00	0.00	0.0
5	40.70	0.00	0.00	0.00	0.00	0.00	0.00	0.0
6	40.60	0.00	0.00	0.00	0.00	0.00	0.00	0.0
7	39.80	0.00	0.00	0.00	0.00	0.00	0.00	0.0
8	39.00	0.00	0.00	0.00	0.00	0.00	0.00	0.0
9	38.30	0.00	0.00	0.00	0.00	0.00	0.00	0.0
10	37.60	0.00	0.00	0.00	0.00	0.00	0.00	0.0
11	36.85	0.00	0.00	0.00	0.00	0.00	0.00	0.0
12	36.10	0.00	0.00	0.00	0.00	0.00	0.00	0.0
		0.00	0.00	0.00	0.00	0.00	0.00	149996
13	35.10	0.00	20.00	2.86	251.34	2.86	2.86a	149996
		0.00	20.00	0.00	114.23	36.24	36.24	19999
14	34.50	5.40	25.40	1.05	137.39	54.57	59.97	19999
		5.40	25.40	0.00	219.02	105.17	110.57	49999
15	33.75	12.15	32.91	0.00	263.15	96.27	108.42	49999
16	33.00	18.90	40.42	0.00	307.32	79.21	98.11	49999
17	32.00	27.90	50.45	0.54	366.28	68.18	96.08	49999
18	31.25	34.65	57.99	2.26	410.57	60.12	94.77	49999
19	30.50	41.40	65.53	3.99	454.93	59.29	100.69	49999
		41.40	65.53	0.00	988.67	87.62	129.02	149996
20	29.50	45.00	82.02	0.00	1126.77	63.57	108.57	149996
21	28.50	45.00	102.13	0.00	1295.25	18.43	63.43	149996
22	28.40	45.00	104.14	0.00	1312.12	62.00	107.00	149996
23	28.20	45.00	108.17	0.00	1345.85	63.30	108.30	149996
24	26.10	45.00	150.52	0.00	1700.71	78.15	123.15	149996
25	24.00	45.00	193.04	0.00	2056.90	92.85	137.85	149996
26	20.00	45.00	274.50	1.23	2739.42	121.63	166.63	149996

RIGHT side

Node no.	Y coord	Water press.	Vertic -al	Active limit	Passive limit	Earth press.	earth press.	soil modulus
		kN/m2	kN/m2	kN/m2	kN/m2	kN/m2	kN/m2	kN/m2
1	42.60	0.00	0.00	0.00	26.45	25.24	25.24	19999
2	42.00	0.00	14.76	0.00	82.70	23.38	23.38	19999
3	41.10	0.00	31.56	3.32	146.76	19.66	19.66	19999
4	41.00	0.00	33.38	3.88	153.72	15.09	15.09	19999
5	40.70	3.00	35.84	4.65	163.09	13.82	16.82	19999
6	40.60	4.00	36.66	4.90	166.20	8.59	12.59	19999
7	39.80	12.00	43.15	6.92	190.96	2.44	14.44A	19999
8	39.00	20.00	49.64	8.93	215.69	0.00	20.00A	19999
		20.00	49.64	7.96	241.31	0.00	20.00A	19999

(continued)

Stage No.8 Fill to elevation 36.10 on LEFT side with soil type 5

		RIGHT side						
			Effective stresses				Total	Adjusted
Node no.	Y coord	Water press.	Vertic -al	Active limit	Passive limit	Earth press.	earth press.	soil modulus
		kN/m2	kN/m2	kN/m2	kN/m2	kN/m2	kN/m2	kN/m2
9	38.30	27.00	55.33	9.58	265.70	0.26	27.26A	19999
10	37.60	34.00	61.03	11.21	290.15	0.53	34.53A	19999
11	36.85	41.50	67.15	12.95	316.39	0.81	42.31A	19999
12	36.10	45.00	77.27	15.84	359.79	10.42	55.42A	19999
13	35.10	45.00	95.42	21.01	437.60	22.39	67.39	19999
14	34.50	45.00	106.30	24.11	484.24	25.41	70.41	19999
		45.00	106.30	13.32	694.58	16.56	61.56	49997
15	33.75	45.00	120.63	16.60	778.81	19.97	64.97	49997
16	33.00	45.00	134.93	19.88	862.91	23.25	68.25	49997
17	32.00	45.00	153.97	24.23	974.83	31.50	76.50	49997
18	31.25	45.00	168.22	27.50	1058.61	48.35	93.35	49997
19	30.50	45.00	182.45	30.75	1142.28	58.62	103.62	49997
		45.00	182.45	0.00	1968.22	7.67	52.67	149992
20	29.50	45.00	202.40	0.00	2135.32	45.04	90.04	149992
21	28.50	45.00	222.32	0.00	2302.20	104.25	149.25	149992
22	28.40	45.00	224.31	0.00	2318.87	62.00	107.00	149992
23	28.20	45.00	228.29	0.00	2352.22	63.36	108.36	149992
24	26.10	45.00	270.03	0.42	2701.99	78.16	123.16	149992
25	24.00	45.00	311.73	8.01	3051.32	92.97	137.97	149992
26	20.00	45.00	391.10	22.46	3716.30	121.40	166.40	149992

Legend: 2.86 a Soil pressure at active limit
123.45 p Soil pressure at passive limit
55.42 A Arching - soil pressure below active limit

Units: kN,m

Stage No.8 Fill to elev. 36.10 on LEFT side

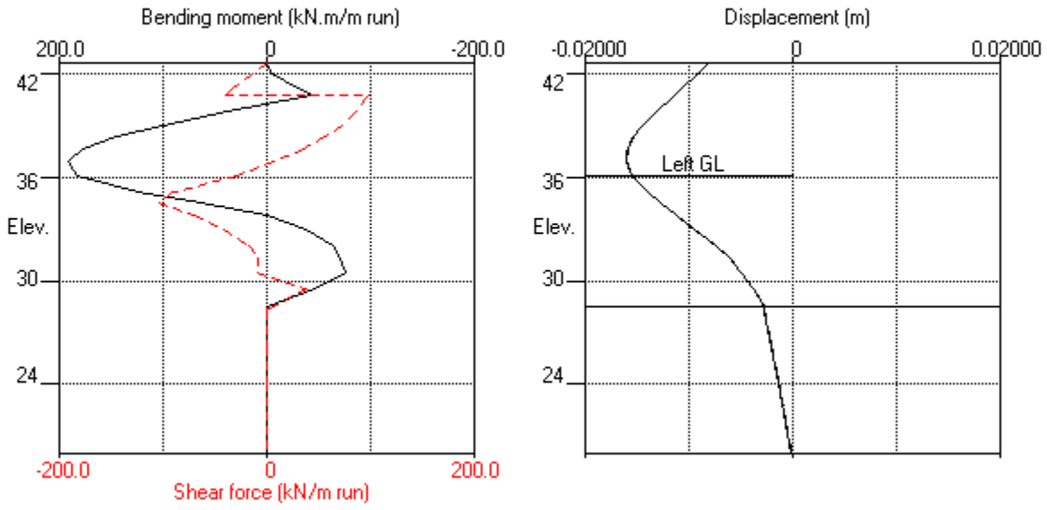

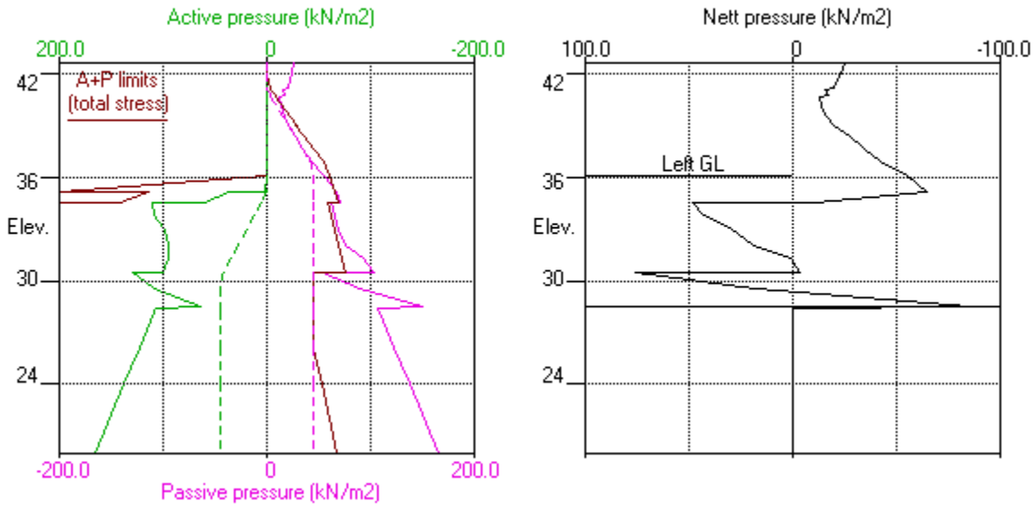

Units: kN,m

Stage No.12 Remove prop no.1 at elev. 40.70

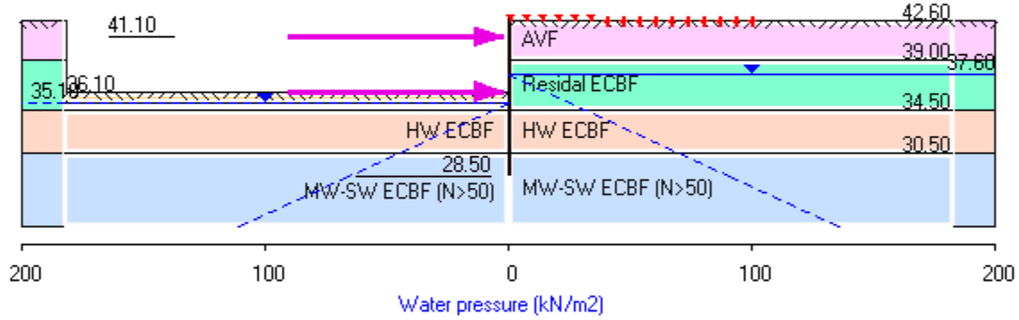

TONKIN + TAYLOR LTD | Sheet No.
Program: WALLAP Version 6.09 Revision A61.B78.R61 | Job No.
Licensed from GEOSOLVE | Made by :
Data filename/Run ID: 20261027_UoA_Section3_Prop_DeflectionEnvelope
New data set - contains default parameters | Date:28-10-2026
Please modify / add | Checked :

Units: kN,m

Stage No. 12 Remove strut or anchor no.1 at elevation 40.70

STABILITY ANALYSIS of Fully Embedded Wall according to Strength Factor method
Factor of safety on soil strength

Stage No.	Ground level Act.	Prop Pass.	FoS for toe elev. = 28.50 Prop Elev.	Factor of Safety	Moment equilib. at elev.	Toe elev. for FoS = 1.500 Toe elev.	Wall Penetr -ation	Direction of failure
12	36.10	42.60	More than one prop. No FoS calc.					

BENDING MOMENT and DISPLACEMENT ANALYSIS of Fully Embedded Wall
Analysis options
2-D finite element model. Active limit arching modelled.
Soil deformations are elastic until the active or passive limit is reached
Open Tension Crack analysis - No

Length of wall perpendicular to section = 1000.00m
Rigid boundaries: Left side 40.00m from wall Rough
Right side 40.00m from wall Rough
Lower boundary at elevation 20.00m Rough
Soil-wall interface Smooth

*** Wall displacements reset to zero at stage 3

Warnings concerning changes to wall stiffness
have been ignored. Please review the calculated bending moments
for unexpected values and read the Help Topic

Node no.	Y coord	Nett pressure kN/m2	Wall disp. m	Wall rotation rad.	Shear force kN/m	Bending moment kN.m/m	Prop forces kN/m	EI of wall kN.m2/m
1	42.60	-20.46	-0.009	1.32E-03	0.0	-0.0		187670
2	42.00	-19.32	-0.010	1.33E-03	-11.9	-4.1		187670
3	41.10	-16.27	-0.011	1.39E-03	-28.0	-23.9	91.3	187670
		-16.27	-0.011	1.39E-03	63.4	-23.9		
4	41.00	-12.01	-0.011	1.40E-03	61.9	-17.7		187670
5	40.70	-12.05	-0.011	1.42E-03	58.3	0.3		187670
6	40.60	-8.15	-0.012	1.42E-03	57.3	6.1		187670
7	39.80	-7.28	-0.013	1.30E-03	51.2	48.1		187670
8	39.00	-10.96	-0.014	1.02E-03	43.9	86.0		187670
9	38.30	-16.56	-0.014	6.48E-04	34.2	113.6		187670
10	37.60	-21.55	-0.015	1.88E-04	20.9	133.0		187670
11	36.85	-30.35	-0.014	-3.59E-04	1.4	141.7		187670
12	36.10	-45.86	-0.014	-9.08E-04	-27.2	133.3	14.2	187670
		-45.86	-0.014	-9.08E-04	-13.0	133.3		
13	35.10	-60.05	-0.013	-1.51E-03	-65.9	96.0		187670
		-30.88	-0.013	-1.51E-03	-65.9	96.0		
14	34.50	-11.30	-0.012	-1.75E-03	-78.6	50.9		187670
		35.73	-0.012	-1.75E-03	-78.6	50.9		
15	33.75	33.85	-0.010	-1.85E-03	-52.5	2.0		187670
16	33.00	24.21	-0.009	-1.80E-03	-30.7	-27.8		187670
17	32.00	14.10	-0.007	-1.61E-03	-11.5	-46.4		187670
18	31.25	-4.56	-0.006	-1.41E-03	-8.0	-51.1		187670
19	30.50	-13.15	-0.005	-1.19E-03	-14.6	-58.3		187670
		67.26	-0.005	-1.19E-03	-14.6	-58.3		
20	29.50	20.06	-0.004	-9.39E-04	29.1	-39.1		187670
21	28.50	-71.08	-0.003	-8.35E-04	3.6	0.0		0

(continued)

Stage No.12 Remove strut or anchor no.1 at elevation 40.70

Node no.	Y coord	Nett pressure	Wall disp.	Wall rotation	Shear force	Bending moment	Prop forces	EI of wall
		kN/m2	m	rad.	kN/m	kN.m/m	kN/m	kN.m2/m
22	28.40	-0.00	-0.003	0	-0.0	0.0		0
23	28.20	-0.06	-0.003	0	-0.0	0.0		0
24	26.10	-0.01	-0.002	0	-0.1	0.0		0
25	24.00	-0.12	-0.002	0	-0.2	0.0		0
26	20.00	0.23	-0.000	0	-0.0	0.0		---

At elev. 41.10 Prop force = 91.3 kN/m run
At elev. 36.10 Prop force = 14.2 kN/m run

LEFT side

Node no.	Y coord	Effective stresses: Water press.	Vertic -al	Active limit	Passive limit	Earth press.	Total earth press.	Adjusted soil modulus
		kN/m2	kN/m2	kN/m2	kN/m2	kN/m2	kN/m2	kN/m2
1	42.60	0.00	0.00	0.00	0.00	0.00	0.00	0.0
2	42.00	0.00	0.00	0.00	0.00	0.00	0.00	0.0
3	41.10	0.00	0.00	0.00	0.00	0.00	0.00	0.0
4	41.00	0.00	0.00	0.00	0.00	0.00	0.00	0.0
5	40.70	0.00	0.00	0.00	0.00	0.00	0.00	0.0
6	40.60	0.00	0.00	0.00	0.00	0.00	0.00	0.0
7	39.80	0.00	0.00	0.00	0.00	0.00	0.00	0.0
8	39.00	0.00	0.00	0.00	0.00	0.00	0.00	0.0
9	38.30	0.00	0.00	0.00	0.00	0.00	0.00	0.0
10	37.60	0.00	0.00	0.00	0.00	0.00	0.00	0.0
11	36.85	0.00	0.00	0.00	0.00	0.00	0.00	0.0
12	36.10	0.00	0.00	0.00	0.00	0.00	0.00	0.0
		0.00	0.00	0.00	0.00	0.00	0.00	149996
13	35.10	0.00	20.00	2.86	251.34	2.86	2.86a	149996
		0.00	20.00	0.00	114.23	32.03	32.03	19999
14	34.50	6.00	24.80	0.88	134.82	50.32	56.32	19999
		6.00	24.80	0.00	215.49	95.01	101.01	49999
15	33.75	13.50	31.56	0.00	255.21	89.32	102.82	49999
16	33.00	21.00	38.32	0.00	294.97	75.91	96.91	49999
17	32.00	31.00	47.35	0.00	348.06	67.47	98.47	49999
18	31.25	38.50	54.14	1.38	387.94	61.10	99.60	49999
19	30.50	46.00	60.93	2.94	427.89	59.98	105.98	49999
		46.00	60.93	0.00	950.14	92.75	138.75	149996
20	29.50	56.00	71.02	0.00	1034.61	69.33	125.33	149996
21	28.50	66.00	81.13	0.00	1119.32	27.38	93.38	149996
22	28.40	67.00	82.14	0.00	1127.80	63.19	130.19	149996
23	28.20	69.00	84.17	0.00	1144.78	63.78	132.78	149996
24	26.10	90.00	105.52	0.00	1323.70	71.57	161.57	149996
25	24.00	111.00	127.04	0.00	1503.96	79.25	190.25	149996
26	20.00	151.00	168.50	0.00	1851.35	94.74	245.74	149996

RIGHT side

Node no.	Y coord	Effective stresses: Water press.	Vertic -al	Active limit	Passive limit	Earth press.	Total earth press.	Adjusted soil modulus
		kN/m2	kN/m2	kN/m2	kN/m2	kN/m2	kN/m2	kN/m2
1	42.60	0.00	0.00	0.00	26.45	20.46	20.46	19999
2	42.00	0.00	14.76	0.00	82.70	19.32	19.32	19999
3	41.10	0.00	31.56	3.32	146.76	16.27	16.27	19999
4	41.00	0.00	33.38	3.88	153.72	12.01	12.01	19999
5	40.70	0.00	38.84	5.58	174.52	12.05	12.05	19999
6	40.60	0.00	40.66	6.14	181.44	8.15	8.15	19999
7	39.80	0.00	55.15	10.64	236.71	7.28	7.28A	19999

(continued)

Stage No.12 Remove strut or anchor no.1 at elevation 40.70

		RIGHT side						
			Effective stresses				Total	Adjusted
Node no.	Y coord	Water press.	Vertic -al	Active limit	Passive limit	Earth press.	earth press.	soil modulus
		kN/m2	kN/m2	kN/m2	kN/m2	kN/m2	kN/m2	kN/m2
8	39.00	0.00	69.64	15.14	291.94	10.96	10.96A	19999
		0.00	69.64	13.66	327.06	10.96	10.96A	19999
9	38.30	0.00	82.33	17.28	381.47	16.56	16.56A	19999
10	37.60	0.00	95.03	20.90	435.93	21.55	21.55	19999
11	36.85	7.50	101.15	22.64	462.17	22.85	30.35	19999
12	36.10	15.00	107.27	24.39	488.42	30.86	45.86	19999
13	35.10	25.00	115.42	26.71	523.36	37.91	62.91	19999
14	34.50	31.00	120.30	28.10	544.27	36.63	67.63	19999
		31.00	120.30	16.53	776.89	34.28	65.28	49997
15	33.75	38.50	127.13	18.09	817.02	30.47	68.97	49997
16	33.00	46.00	133.93	19.65	857.03	26.70	72.70	49997
17	32.00	56.00	142.97	21.72	910.16	28.36	84.36	49997
18	31.25	63.50	149.72	23.26	949.86	40.66	104.16	49997
19	30.50	71.00	156.45	24.80	989.43	48.13	119.13	49997
		71.00	156.45	0.00	1750.39	0.49	71.49	149992
20	29.50	81.00	166.40	0.00	1833.72	24.27	105.27	149992
21	28.50	91.00	176.32	0.00	1916.81	73.46	164.46	149992
22	28.40	92.00	177.31	0.00	1925.11	38.19	130.19	149992
23	28.20	94.00	179.29	0.00	1941.70	38.84	132.84	149992
24	26.10	115.00	200.03	0.00	2115.53	46.59	161.59	149992
25	24.00	136.00	220.73	0.00	2288.92	54.37	190.37	149992
26	20.00	176.00	260.10	0.00	2618.78	69.51	245.51	149992

Legend: 2.86 a Soil pressure at active limit
123.45 p Soil pressure at passive limit
16.56 A Arching - soil pressure below active limit

Units: kN,m

Stage No.12 Remove prop no.1 at elev. 40.70

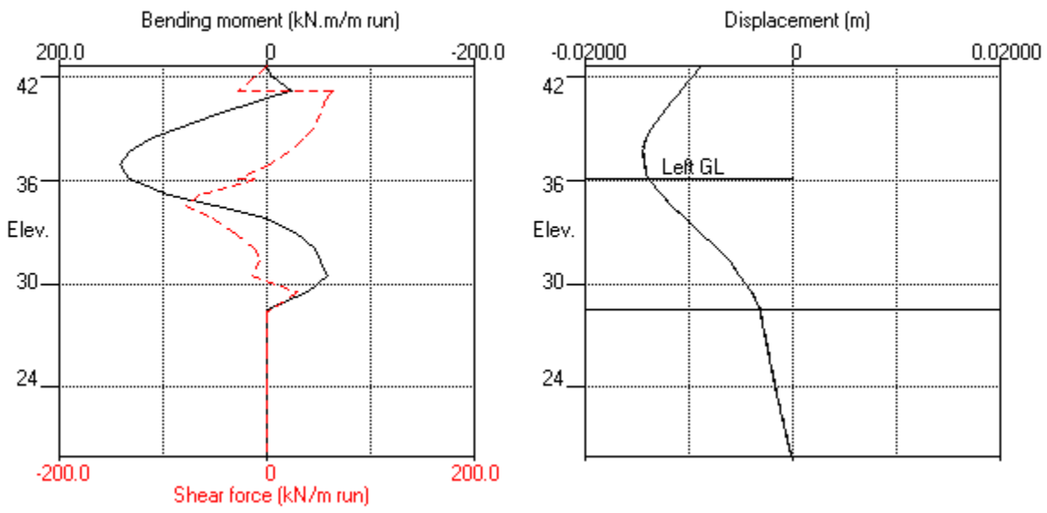

Units: kN,m

Stage No.13 Change EI of wall to 125120kN.m2/m run

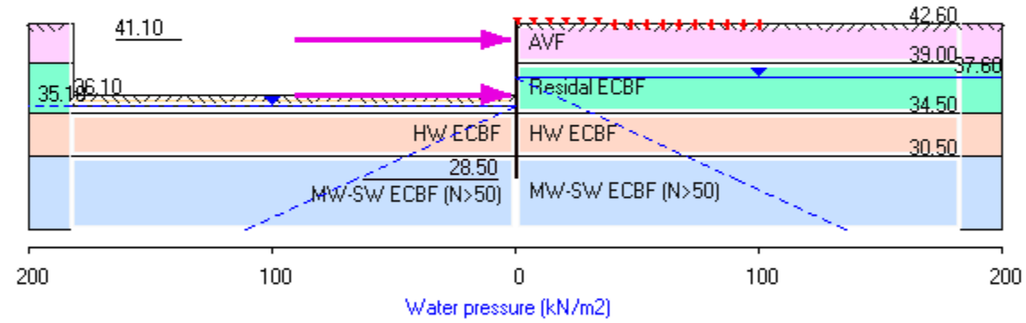

TONKIN + TAYLOR LTD | Sheet No.
Program: WALLAP Version 6.09 Revision A61.B78.R61 | Job No.
Licensed from GEOSOLVE | Made by :
Data filename/Run ID: 20261027_UoA_Section3_Prop_DeflectionEnvelope
New data set - contains default parameters | Date:28-10-2026
Please modify / add | Checked :

Units: kN,m

Stage No. 13 Change EI of wall to 125120 kN.m2/m run
Allow wall to relax with new modulus value

STABILITY ANALYSIS of Fully Embedded Wall according to Strength Factor method
Factor of safety on soil strength

Stage No.	Ground level Act.	Ground level Pass.	Prop Elev.	FoS for toe elev. = 28.50 Factor of Safety	Moment equilib. at elev.	Toe elev. for FoS = 1.500 Toe elev.	Wall Penetr -ation	Direction of failure
13	36.10	42.60	More than one prop. No FoS calc.					

BENDING MOMENT and DISPLACEMENT ANALYSIS of Fully Embedded Wall
Analysis options
2-D finite element model. Active limit arching modelled.
Soil deformations are elastic until the active or passive limit is reached
Open Tension Crack analysis - No

Length of wall perpendicular to section = 1000.00m
Rigid boundaries: Left side 40.00m from wall Rough
Right side 40.00m from wall Rough
Lower boundary at elevation 20.00m Rough
Soil-wall interface Smooth

*** Wall displacements reset to zero at stage 3

Warnings concerning changes to wall stiffness
have been ignored. Please review the calculated bending moments
for unexpected values and read the Help Topic

Node no.	Y coord	Nett pressure kN/m2	Wall disp. m	Wall rotation rad.	Shear force kN/m	Bending moment kN.m/m	Prop forces kN/m	EI of wall kN.m2/m
1	42.60	-21.01	-0.009	1.35E-03	0.0	-0.0		125120
2	42.00	-19.99	-0.010	1.36E-03	-12.3	-4.2		125120
3	41.10	-16.98	-0.011	1.47E-03	-28.9	-24.5	82.3	125120
		-16.98	-0.011	1.47E-03	53.4	-24.5		
4	41.00	-12.61	-0.011	1.48E-03	51.9	-19.0		125120
5	40.70	-12.52	-0.011	1.51E-03	48.1	-3.2		125120
6	40.60	-8.27	-0.012	1.51E-03	47.1	1.8		125120
7	39.80	-6.88	-0.013	1.40E-03	41.0	37.6		125120
8	39.00	-9.95	-0.014	1.09E-03	34.3	69.5		125120
9	38.30	-15.17	-0.014	6.78E-04	25.5	92.2		125120
10	37.60	-20.10	-0.015	1.65E-04	13.1	107.3		125120
11	36.85	-29.16	-0.015	-4.35E-04	-5.3	111.9		125120
12	36.10	-45.18	-0.014	-1.00E-03	-33.2	99.9	34.8	125120
		-45.18	-0.014	-1.00E-03	1.6	99.9		
13	35.10	-57.90	-0.013	-1.62E-03	-50.0	73.8		125120
		-30.29	-0.013	-1.62E-03	-50.0	73.8		
14	34.50	-11.55	-0.012	-1.86E-03	-62.5	36.0		125120
		35.10	-0.012	-1.86E-03	-62.5	36.0		
15	33.75	30.56	-0.010	-1.93E-03	-37.9	-3.9		125120
16	33.00	19.29	-0.009	-1.84E-03	-19.2	-26.3		125120
17	32.00	9.17	-0.007	-1.59E-03	-5.0	-38.1		125120
18	31.25	-9.09	-0.006	-1.38E-03	-4.9	-40.2		125120
19	30.50	-16.90	-0.005	-1.14E-03	-14.7	-46.6		125120
		55.99	-0.005	-1.14E-03	-14.7	-46.6		
20	29.50	16.00	-0.004	-8.58E-04	21.3	-31.7		125120

Run ID. 20261027_UoA_Section3_Prop_DeflectionEnvelope | Sheet No.
New data set - contains default parameters | Date:28-10-2026
Please modify / add | Checked :

(continued)

Stage No.13 Change EI of wall to 125120 kN.m2/m run
Allow wall to relax with new modulus value

Node no.	Y coord	Nett pressure	Wall disp.	Wall rotation	Shear force	Bending moment	Prop forces	EI of wall
		kN/m2	m	rad.	kN/m	kN.m/m	kN/m	kN.m2/m
21	28.50	-53.29	-0.003	-7.41E-04	2.7	0.0		0
22	28.40	-0.00	-0.003	0	-0.0	0.0		0
23	28.20	-0.06	-0.003	0	-0.0	0.0		0
24	26.10	-0.01	-0.002	0	-0.1	0.0		0
25	24.00	-0.12	-0.002	0	-0.2	0.0		0
26	20.00	0.23	-0.000	0	-0.0	0.0		---

At elev. 41.10 Prop force = 82.3 kN/m run
At elev. 36.10 Prop force = 34.8 kN/m run

LEFT side

Node no.	Y coord	Effective stresses: Water press.	Vertic -al	Active limit	Passive limit	Earth press.	Total earth press.	Adjusted soil modulus
		kN/m2	kN/m2	kN/m2	kN/m2	kN/m2	kN/m2	kN/m2
1	42.60	0.00	0.00	0.00	0.00	0.00	0.00	0.0
2	42.00	0.00	0.00	0.00	0.00	0.00	0.00	0.0
3	41.10	0.00	0.00	0.00	0.00	0.00	0.00	0.0
4	41.00	0.00	0.00	0.00	0.00	0.00	0.00	0.0
5	40.70	0.00	0.00	0.00	0.00	0.00	0.00	0.0
6	40.60	0.00	0.00	0.00	0.00	0.00	0.00	0.0
7	39.80	0.00	0.00	0.00	0.00	0.00	0.00	0.0
8	39.00	0.00	0.00	0.00	0.00	0.00	0.00	0.0
9	38.30	0.00	0.00	0.00	0.00	0.00	0.00	0.0
10	37.60	0.00	0.00	0.00	0.00	0.00	0.00	0.0
11	36.85	0.00	0.00	0.00	0.00	0.00	0.00	0.0
12	36.10	0.00	0.00	0.00	0.00	0.00	0.00	0.0
		0.00	0.00	0.00	0.00	0.00	0.00	149996
13	35.10	0.00	20.00	2.86	251.34	4.66	4.66	149996
		0.00	20.00	0.00	114.23	32.27	32.27	19999
14	34.50	6.00	24.80	0.88	134.82	50.11	56.11	19999
		6.00	24.80	0.00	215.49	94.48	100.48	49999
15	33.75	13.50	31.56	0.00	255.21	87.60	101.10	49999
16	33.00	21.00	38.32	0.00	294.97	73.43	94.43	49999
17	32.00	31.00	47.35	0.00	348.06	65.00	96.00	49999
18	31.25	38.50	54.14	1.38	387.94	58.83	97.33	49999
19	30.50	46.00	60.93	2.94	427.89	58.10	104.10	49999
		46.00	60.93	0.00	950.14	87.11	133.11	149996
20	29.50	56.00	71.02	0.00	1034.61	67.31	123.31	149996
21	28.50	66.00	81.13	0.00	1119.32	36.28	102.28	149996
22	28.40	67.00	82.14	0.00	1127.80	63.20	130.20	149996
23	28.20	69.00	84.17	0.00	1144.78	63.79	132.79	149996
24	26.10	90.00	105.52	0.00	1323.70	71.58	161.58	149996
25	24.00	111.00	127.04	0.00	1503.96	79.25	190.25	149996
26	20.00	151.00	168.50	0.00	1851.35	94.74	245.74	149996

RIGHT side

Node no.	Y coord	Effective stresses: Water press.	Vertic -al	Active limit	Passive limit	Earth press.	Total earth press.	Adjusted soil modulus
		kN/m2	kN/m2	kN/m2	kN/m2	kN/m2	kN/m2	kN/m2
1	42.60	0.00	0.00	0.00	26.45	21.01	21.01	19999
2	42.00	0.00	14.76	0.00	82.70	19.99	19.99	19999
3	41.10	0.00	31.56	3.32	146.76	16.98	16.98	19999
4	41.00	0.00	33.38	3.88	153.72	12.61	12.61	19999
5	40.70	0.00	38.84	5.58	174.52	12.52	12.52	19999

(continued)

Stage No.13 Change EI of wall to 125120 kN.m2/m run
Allow wall to relax with new modulus value

		RIGHT side						
			Effective stresses				Total	Adjusted
Node no.	Y coord	Water press.	Vertic -al	Active limit	Passive limit	Earth press.	earth press.	soil modulus
		kN/m2	kN/m2	kN/m2	kN/m2	kN/m2	kN/m2	kN/m2
6	40.60	0.00	40.66	6.14	181.44	8.27	8.27	19999
7	39.80	0.00	55.15	10.64	236.71	6.88	6.88A	19999
8	39.00	0.00	69.64	15.14	291.94	9.95	9.95A	19999
		0.00	69.64	13.66	327.06	9.95	9.95A	19999
9	38.30	0.00	82.33	17.28	381.47	15.17	15.17A	19999
10	37.60	0.00	95.03	20.90	435.93	20.10	20.10A	19999
11	36.85	7.50	101.15	22.64	462.17	21.66	29.16A	19999
12	36.10	15.00	107.27	24.39	488.42	30.18	45.18	19999
13	35.10	25.00	115.42	26.71	523.36	37.56	62.56	19999
14	34.50	31.00	120.30	28.10	544.27	36.67	67.67	19999
		31.00	120.30	16.53	776.89	34.38	65.38	49997
15	33.75	38.50	127.13	18.09	817.02	32.04	70.54	49997
16	33.00	46.00	133.93	19.65	857.03	29.14	75.14	49997
17	32.00	56.00	142.97	21.72	910.16	30.82	86.82	49997
18	31.25	63.50	149.72	23.26	949.86	42.92	106.42	49997
19	30.50	71.00	156.45	24.80	989.43	50.00	121.00	49997
		71.00	156.45	0.00	1750.39	6.11	77.11	149992
20	29.50	81.00	166.40	0.00	1833.72	26.30	107.30	149992
21	28.50	91.00	176.32	0.00	1916.81	64.57	155.57	149992
22	28.40	92.00	177.31	0.00	1925.11	38.20	130.20	149992
23	28.20	94.00	179.29	0.00	1941.70	38.85	132.85	149992
24	26.10	115.00	200.03	0.00	2115.53	46.59	161.59	149992
25	24.00	136.00	220.73	0.00	2288.92	54.37	190.37	149992
26	20.00	176.00	260.10	0.00	2618.78	69.51	245.51	149992

Legend: 12.34 a Soil pressure at active limit
123.45 p Soil pressure at passive limit
29.16 A Arching - soil pressure below active limit

Units: kN,m

Stage No.13 Change EI of wall to 125120kN.m2/m run

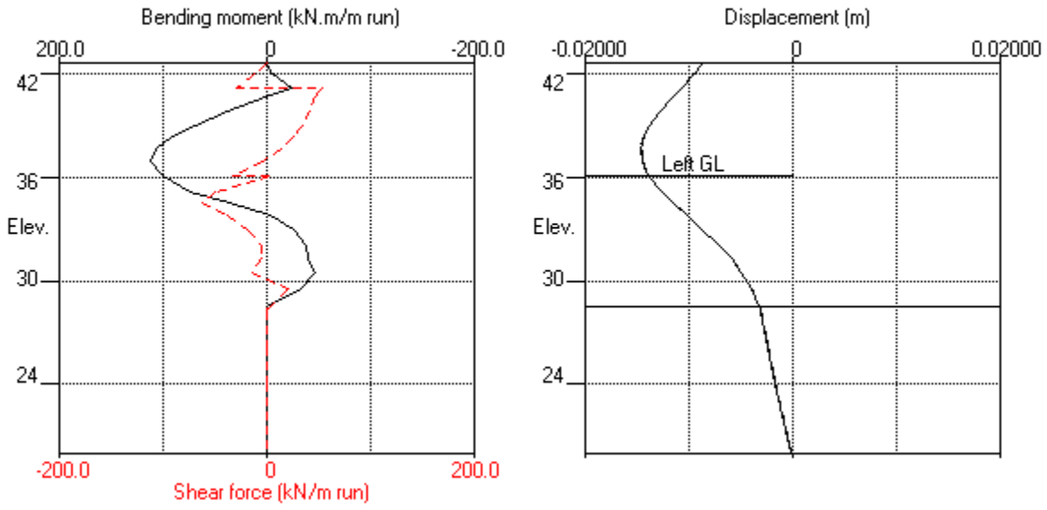

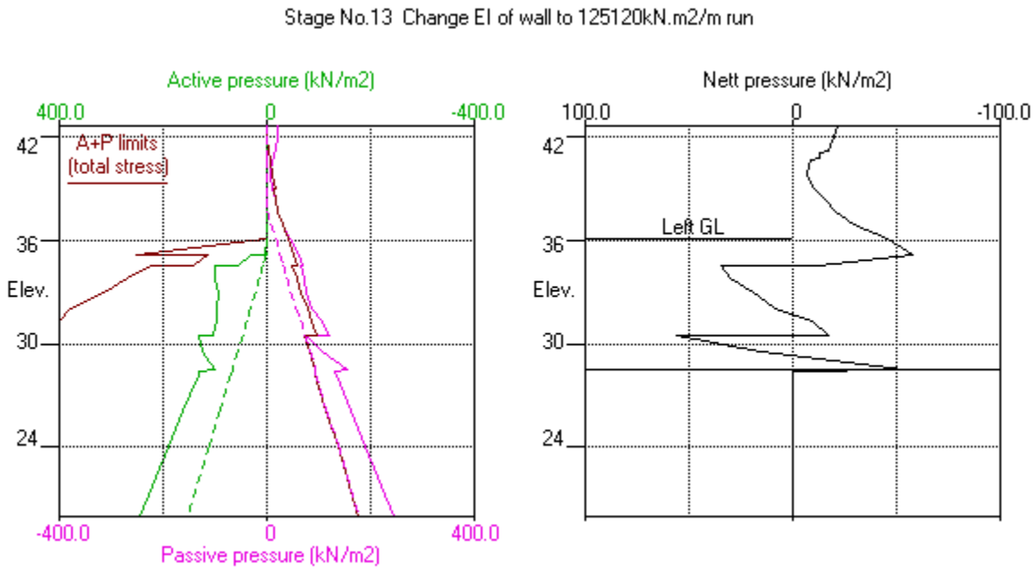

Units: kN,m

Summary of results

STABILITY ANALYSIS of Fully Embedded Wall according to Strength Factor method
Factor of safety on soil strength

Stage No.	Ground level Act.	Pass.	Prop Elev.	FoS for toe elev. = 28.50 Factor of Safety	Moment equilib. at elev.	Toe elev. for FoS = 1.500 Toe elev.	Wall Penetr -ation	Direction of failure
1	42.60	42.60	Cant.	Conditions not suitable for FoS calc.				
2	42.60	42.60	Cant.	Conditions not suitable for FoS calc.				
3	42.60	42.60	No analysis at this stage					
4	42.60	42.60	No analysis at this stage					
5	42.60	40.60	Cant.	2.024	29.49	33.28	7.32	R to L
6	40.60	42.60	No analysis at this stage					
7	42.60	35.10	40.70	2.833	n/a	31.12	3.98	R to L
8	42.60	36.10	40.70	3.598	n/a	33.07	3.03	R to L
9	42.60	36.10	40.70	3.374	n/a	33.57	2.53	R to L
10	36.10	42.60	No analysis at this stage					

All remaining stages have more than one prop - FoS calculation n/a

Units: kN,m

Summary of results

BENDING MOMENT and DISPLACEMENT ANALYSIS of Fully Embedded Wall

Analysis options

2-D finite element model. Active limit arching modelled.
Soil deformations are elastic until the active or passive limit is reached
Open Tension Crack analysis - No

Length of wall perpendicular to section = 1000.00m
Rigid boundaries: Left side 40.00m from wall Rough
Right side 40.00m from wall Rough
Lower boundary at elevation 20.00m Rough
Soil-wall interface Smooth

Warnings concerning changes to wall stiffness

have been ignored. Please review the calculated bending moments
for unexpected values and read the Help Topic

Bending moment, shear force and displacement envelopes

Node no.	Y coord	Displacement maximum	Displacement minimum	Bending moment maximum	Bending moment minimum	Shear force maximum	Shear force minimum
		m	m	kN.m/m	kN.m/m	kN/m	kN/m
1	42.60	0.000	-0.011	0.0	-0.0	0.0	0.0
2	42.00	0.000	-0.010	0.0	-5.2	0.2	-15.3
3	41.10	0.000	-0.011	0.1	-30.0	63.4	-35.5
4	41.00	0.000	-0.011	0.1	-33.7	61.9	-37.3
5	40.70	0.000	-0.011	0.3	-45.7	99.9	-42.3
6	40.60	0.000	-0.012	6.1	-35.8	98.4	-4.4
7	39.80	0.000	-0.013	48.1	-4.6	87.2	-0.0
8	39.00	0.000	-0.015	100.9	-0.2	73.3	0.0
9	38.30	0.000	-0.016	146.5	-0.0	56.9	0.0
10	37.60	0.000	-0.016	178.9	0.0	35.5	0.0
11	36.85	0.000	-0.016	195.0	0.0	10.3	-5.3
12	36.10	0.000	-0.016	188.0	0.0	1.6	-33.2
13	35.10	0.000	-0.015	131.2	0.0	0.0	-91.2
14	34.50	0.000	-0.013	71.5	-0.1	0.0	-104.8
15	33.75	0.000	-0.012	7.0	-12.4	0.0	-70.4
16	33.00	0.000	-0.010	0.0	-38.2	0.2	-43.0
17	32.00	0.000	-0.008	0.0	-63.8	0.1	-18.7
18	31.25	0.000	-0.007	0.1	-70.4	0.0	-11.6
19	30.50	0.000	-0.005	0.0	-76.9	0.0	-14.8
20	29.50	0.000	-0.004	0.0	-48.7	38.2	0.0
21	28.50	0.000	-0.003	0.0	-0.0	4.4	0.0
22	28.40	0.000	-0.003	0.0	0.0	0.0	-0.0
23	28.20	0.000	-0.003	0.0	0.0	0.0	-0.0
24	26.10	0.000	-0.002	0.0	0.0	0.0	-0.1
25	24.00	0.000	-0.002	0.0	0.0	0.0	-0.2
26	20.00	0.000	-0.000	0.0	0.0	0.0	-0.0

Summary of results (continued)

Maximum and minimum bending moment and shear force at each stage

Stage no.	Bending moment maximum	Bending moment elev.	Bending moment minimum	Bending moment elev.	Shear force maximum	Shear force elev.	Shear force minimum	Shear force elev.
	kN.m/m		kN.m/m		kN/m		kN/m	
1	0.1	35.10	-0.1	30.50	0.1	36.85	-0.3	30.50
2	0.2	36.10	-0.3	33.75	0.2	33.00	-0.8	34.50
3	No calculation at this stage							
4	No calculation at this stage							
5	22.0	36.10	-27.3	30.50	13.5	29.50	-26.0	34.50
6	No calculation at this stage							
7	195.0	36.85	-76.9	30.50	99.9	40.70	-104.8	34.50
8	192.6	36.85	-76.3	30.50	98.5	40.70	-103.7	34.50
9	148.1	36.85	-58.9	30.50	73.0	40.70	-82.7	34.50
10	No calculation at this stage							
11	No calculation at this stage							
12	141.7	36.85	-58.3	30.50	63.4	41.10	-78.6	34.50
13	111.9	36.85	-46.6	30.50	53.4	41.10	-62.5	34.50

Maximum and minimum displacement at each stage

Stage no.	Displacement maximum	Displacement elev.	Displacement minimum	Displacement elev.	Stage description
	m		m		
1	0.000	42.60	-0.000	36.10	Apply surcharge no.1 at elev. 42.00
2	0.000	42.60	-0.001	42.60	Apply surcharge no.2 at elev. 42.60
3	Wall displacements reset to zero Change EI of wall to 187670kN.m2/m run				
4	No calculation at this stage				Apply water pressure profile no.1
5	0.000	42.60	-0.011	42.60	Excav. to elev. 40.60 on LEFT side
6	No calculation at this stage				Install prop no.1 at elev. 40.70
7	0.000	42.60	-0.016	36.85	Excav. to elev. 35.10 on LEFT side
8	0.000	42.60	-0.016	36.85	Fill to elev. 36.10 on LEFT side
9	0.000	42.60	-0.014	36.85	Apply water pressure profile no.3
10	No calculation at this stage				Install prop no.4 at elev. 36.10
11	No calculation at this stage				Install prop no.3 at elev. 41.10
12	0.000	42.60	-0.015	37.60	Remove prop no.1 at elev. 40.70
13	0.000	42.60	-0.015	37.60	Change EI of wall to 125120kN.m2/m run

Summary of results (continued)

Prop forces at each stage (horizontal components)

Stage no.	Strut no. 1 at elev. 40.70		Strut no. 3 at elev. 41.10		Strut no. 4 at elev. 36.10	
	kN/m run	kN/prop	kN/m run	kN/prop	kN/m run	kN/prop
7	142.17	511.83	---	---	---	---
8	138.92	500.13	---	---	---	---
9	106.07	381.86	---	---	---	---
12	---	---	91.31	91.31	14.20	14.20
13	---	---	82.29	82.29	34.78	34.78

Units: kN,m

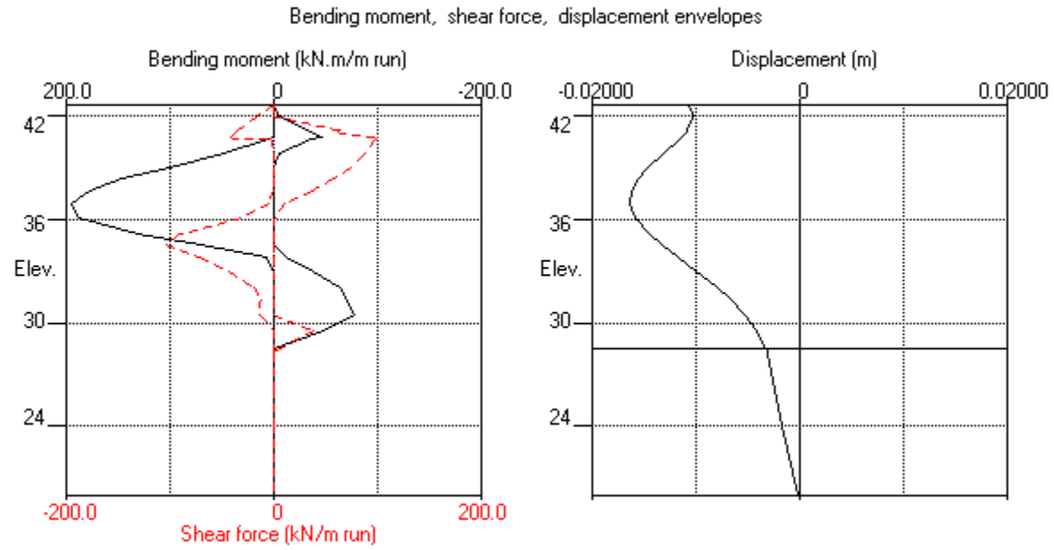



Together we create + sustain a better world