Westhaven Residential Development Fast-track Application – Dewatering Assessment of Environmental Effects

Prepared for

Carter Group Limited

27 October 2026

PATTLE DELAMORE PARTNERS LTD
Level 2, 134 Oxford Terrace
Christchurch Central, Christchurch 8011
PO Box 389, Christchurch 8140, New Zealand

Tel +64 3 345 7100
Web www.pdp.co.nz

solutions for your environment

Quality Control Sheet

TITLE	Westhaven Residential Development Fast-track Application – Dewatering Assessment of Environmental Effects
CLIENT	Carter Group Limited
ISSUE DATE	27 October 2026
JOB REFERENCE	C057550004

Revision History

REV	Date	Status/Purpose	Prepared By	Reviewed by	Approved
1	22/10/26	Draft	Alesha Watkins	Carl Steffens	Hilary Lough
2	27/10/26	Final	Alesha Watkins	Carl Steffens	Hilary Lough

DOCUMENT CONTRIBUTORS

Prepared by

SIGNATURE

Alesha Watkins

Reviewed by

SIGNATURE

Carl Steffens

Approved by

Hilary Lough

Limitations:

This report has been prepared by Pattle Delamore Partners Limited (PDP) on the basis of information provided by Carter Group Limited and others (not directly contracted by PDP for the work), including Inovo, Tetra Tech Coffey Limited and Environment Canterbury. PDP has not independently verified the provided information and has relied upon it being accurate and sufficient for use by PDP in preparing the report. PDP accepts no responsibility for errors or omissions in, or the currency or sufficiency of, the provided information.

This report has been prepared by PDP on the specific instructions of Carter Group Limited for the limited purposes described in the report. PDP accepts no liability if the report is used for a different purpose or if it is used or relied on by any other person. PDP acknowledges that this report may be used and relied upon by the Expert Panel appointed under the Fast-track Approvals Act. Any such use or reliance will be solely at their own risk.

© 2026 Pattle Delamore Partners Limited

Executive Summary

Carter Group Limited (CGL) is proposing to develop an approximately 263 ha area of land to the west of the Rolleston township, between State Highway 1 and Selwyn Road, for residential and commercial use. Dewatering of shallow excavations will be required during construction of the subdivision to allow for the installation of the Westhaven Wastewater Pump Station and the associated underground pipe network.

Available groundwater level information indicates dewatering may be required during construction of the southern pump station along Selwyn Road, and possibly for trenching works for the associated pipe network in the southern blocks of the development. Consented dewatering flows of up to 38 L/s are sought.

A Detailed Site Investigation determined that the site is generally free from contamination, with measured concentrations of metals in soil typically below background concentrations.

There will be no dewatering discharges to surface water as part of the proposed construction works. Instead, dewatering discharges at this site will be back to ground via test pits, where the abstracted water will drain back to groundwater via the high permeability gravel-based strata underlying the site.

The proposed dewatering activity does not meet all the conditions of the Land and Water Regional Plan permitted activity Rule 5.119 and therefore resource consent is required as a restricted discretionary activity under Rule 5.120 of the plan. As a result, relevant effects assessments have been carried out as required by the matters of discretion under Rule 5.120.

The assessments indicate that only Condition 1 of Rule 5.119 is not met (relating to duration of the activity). However, the assessments indicate the potential effects of the proposal, including not meeting Condition 1 of the rule, in addition to drawdown interference and stream depletion effects are less than minor.

Table of Contents

SECTION		PAGE
Executive Summary		ii
1.0	Introduction	1
2.0	Site and Development Details	2
3.0	Hydrology	2
4.0	Geology and Hydrogeology	4
4.1	Geology	4
4.2	Hydrogeology	5
5.0	Proposed Onsite Works and Estimation of Abstraction Rates	7
5.1	Dewatering Abstraction Rates	7
6.0	Assessment of Effects	10
6.1	Dewatering	10
7.0	Conclusion	17

Table of Tables

Table 1: Active bores within a 2 km radius 6

Appendices

Appendix A: Figures

Appendix B: Curriculum Vitae

Appendix C: Borelogs

Appendix D: Schedule 12 Well Interference Assessment

1.0 Introduction

Carter Group Limited (CGL) has engaged Pattle Delamore Partners (PDP) to carry out a technical dewatering assessment of environmental effects relating to the proposed Westhaven Residential Development which will be constructed at the western outskirts of Rolleston township. CGL is applying for a substantive application for approvals under the Fast-track Approvals Act 2024 (FTAA),[1] for the proposed subdivision. The Project is a listed project under Schedule 2 of the FTAA, which is referenced in Schedule 2 as the 'Rolleston West Residential Development'.

To enable construction, some localised dewatering of groundwater will be required. This report outlines our technical environmental assessments relating to resource consent applications to take and use groundwater and the associated discharge of groundwater for dewatering purposes. The location of the proposed subdivision is shown in Figure 1.

It is proposed to subdivide an approximately 263 ha area of flat land to the west of Rolleston, for residential and commercial use. As shown in Figure 1, Appendix A the development is split into various blocks, where the 'Holmes' block is situated in the north, bordered by Main South Road to the north-west, Dunns Crossing Road to the north-east and Burnham School Road to the south-east. There is a gap between the Holmes Block and the areas to the south which incorporate the 'Brookside', 'Skellerup', and 'Skellerup South' blocks. The full southern development area is bordered by Brookside Road to the north-west, Dunns Crossing Road to the north-east, Selwyn Road to the south-east and Edwards Road to the south-west. For the purpose of this report, all four development blocks are collectively referred to as the 'site'. Westhaven Stage 1 is currently being developed within the eastern extents of the Skellerup Block (under separate resource consents) and therefore this area is excluded from the Fast Track application. The site currently consists predominantly of dry land and irrigated pasture and there are a number of lifestyle blocks situated within the Skellerup South Block.

Drainage across the site is via a network of drains and water races. The site is situated approximately 800 m north of a mapped spring zone where groundwater approaches ground elevation and discharges to spring-fed streams Baileys Creek and Silverstream, and then Te Waihora (Lake Ellesmere). Selwyn River (Waikirikiri) is situated approximately 5.7 km to the south-west. A long-term ECan shallow groundwater level monitoring bore (M36/0465) is situated to the west of the Skellerup and Skellerup South blocks as shown in Figure 1.

[1] Fast Track Approvals Act 2024. https://www.legislation.govt.nz/bill/government/2024/0031/6.0/whole.html

This report has been prepared to provide supporting technical information to the main planning assessment and associated application documents being prepared by Inovo Projects Limited (Inovo) and Novo Group. PDP's scope of work is:

- To assess the proposed dewatering activities against the individual conditions of Canterbury Land and Water Regional Plan (LWRP)[2] permitted activity Rule 5.119 and matters of discretion under Rule 5.120.

Relevant background information and subsequent technical assessments are provided in the following sections of this report. Curricula Vitae for the PDP staff that prepared this report are provided in Appendix B.

Expert Witness Code of Conduct

This assessment has been prepared in accordance with the Code of Conduct for Expert Witnesses contained in the Environment Court Practice Note 2023. The authors confirm that they have read that Code and agree to comply with it. In that regard, the authors confirm that this Report is written within their expertise, except were stated that the authors are relying on the assessment of others. The authors confirm that they have not omitted to consider material facts known to them that might alter or detract from the opinions expressed.

2.0 Site and Development Details

The site is relatively flat with a gentle slope to the southeast with an approximate elevation (New Zealand Vertical Datum (NZVD) 2016) range of 36 m to 58 m NZVD.

The proposed development includes:

- Approximately 4,134 lots/household units;
- 7 (seven) reserves; and
- 3 (three) commercial lots;

The proposed lot layout is shown in Figure 2, Appendix A.

3.0 Hydrology

Surface water drainage in proximity to the site is limited to drains and water races and is typically to the south and south-east. Based on depth to groundwater information provided in Section 4.2.1 of this report, these features are not considered to be hydraulically connected to groundwater for the most part. Figure 1 shows the locations of the drains/water races at and in proximity to the site.

[2] Environment Canterbury. https://www.ecan.govt.nz/your-region/plans-strategies-and-bylaws/canterbury-land-and-water-regional-plan/

A water race is present entering the Holmes Block from beneath Main South Road (SH1) in the north-western corner, however after flowing approximately 300 m in a south-easterly direction through the site, the water race turns at 90 degrees and flows toward the south-western boundary. It then turns back 90 degrees and flows in a south-easterly direction again flowing parallel with the site boundary (but outside the boundary).

The same water race enters the Brookside Block in the north-west corner and splits into two channels. One channel appears to flow just outside the site adjacent and parallel to the south-west Brookside Block boundary (in a south-south-east direction). Further south, this channel turns and heads to the south prior to turning again to the east and terminating outside the site (west of the site). The other channel flows to the south-east over the Brookside Block before slightly changing direction (south-south-east) and continuing in this direction along the boundary of the Brookside and Skellerup Blocks. This water race channel leaves the Skellerup Block in the south, prior to turning through 90 degrees and flowing back into the site at the Skellerup South Block. The water race terminates at a soak pit prior to the southern boundary of the Skellerup South Block. We note the water race that enters the Brookside Block at Brookside Road and ultimately terminates in the Skellerup South Block at Selwyn Road will be removed during the early stages of the development.

The next closest surface water feature to the development area is a water race network situated to the east of the site (within the Rolleston urban area). At its closest distance to the site, the nearest channels are situated approximately 300 m from the Holmes Block and approximately 600 m from the Brookside, Skellerup and Skellerup South Blocks.

The head of Baileys Creek is situated approximately 650 m south from the Skellerup South Block, while Silverstream emerges slightly further from the site on the eastern side of Baileys Creek. These streams drain to the Waikirikiri (Selwyn) River significantly further south of the site. However, the closest separation distance from the site to the Waikirikiri River is approximately 5.7 km to the south-west from the proposed development. The Waikirikiri River flows to the south-east prior to discharging into Te Waihora (Lake Ellesmere) approximately 13.5 km south-east from the site.

A broad spring zone is situated around the west and northern sides of Te Waihora, extending to the margins of the Port Hills within Christchurch City and further north through the city to the Waimakariri River (and beyond). This spring zone represents the discharge of groundwater flowing beneath the Canterbury Plains from the west to the ground surface (typically within spring fed streams) where the shallow water table intercepts ground level. This spring zone passes within approximately 800 m of the southern-most boundary of the proposed subdivision at its closest point (at the head of Baileys Creek).

4.0 Geology and Hydrogeology

4.1 Geology

The site is located within the lower, Central Canterbury Plains. The Canterbury Plains comprise a series of large coalescing fluvio-glacial fans built by large, braided rivers (e.g. the Rangitata, Rakaia and Waimakariri) that transported detritus (gravel with sand and silt) eastwards from rapidly rising and eroding mountains in the west. Most of the gravel deposition occurred during successive glaciations, when glaciers partly occupied the inland valleys and extended to the eastern foothills (Brown, 2001[3]).

The online GNS 1:250,000 Geological Map of New Zealand (Forsyth *et al.*, 2008[4]) maps the near-surface geology of the site as late Pleistocene river deposits , described as 'Unweathered, brownish-grey, variable mix of gravels/sand/silt/clay in low river terraces; locally up to 2 m silt (loess) cap.'

Geotechnical investigations at the site carried out by Tetra Tech Coffey generally encountered topsoil from the ground surface to depths of 0.2 m below ground level (bgl), underlain by sandy gravel with minor silt lenses to the base of the test pits (1.5 m bgl) in the Holmes Block (Tetra Tech Coffey, 2020[5]). In the Southern blocks, Tetra Tech Coffey generally encountered topsoil from the ground surface to depths of 0.2 m bgl to 0.4 m bgl, underlain by gravelly silts/sandy gravels to the base of the test pits (1.5 m bgl).

Borelogs available from the ECan well database for four bores within or adjacent to the site are provided in Appendix C. The borelogs show dominantly gravel based strata from near ground level to the maximum investigated depth for those boreholes (M36/8063) of 97.8 m bgl. However, the matrix of the gravel strata is highly variable, ranging from clayey through sandy, or a mix of finer grain sizes. Therefore, the permeability of the gravel strata is also likely to be variable. Clay layers of varying thickness (1 m to 2.5 m) were observed in borelogs for M36/7225 and M36/8063 at depths of between 50 m bgl and 52.8 m bgl. The clay layers are underlain by more permeable sandy and clayey gravels to the base of each borehole. The clay layers do not appear to be laterally continuous across the site.

[3] Brown, L. J. (2001). Canterbury. In M. Rosen, & P. White (eds), *Groundwaters of New Zealand* (pp. 441-459). New Zealand Hydrological Society Inc., Wellington.
[4] Forsyth, P., Barrell, D., & Jongens, R. (2008). *Geology of the Christchurch area.* 1:250 000 geological map 16, Institute of Geological & Nuclear Sciences, Lower Hutt.
[5] Tetra Tech Coffey. (2020). *Rolleston West Residential Ltd - Rolleston West Plan Change– Geotechnical Assessment Report.* Report reference number 773-CHCGE281253 prepared for Rolleston West Residential Ltd. 9 November 2020.

4.2 Hydrogeology

The online ECan Canterbury Maps GIS database (Canterbury Maps)[6] indicates that the site is located within the unconfined/semiconfined aquifer system.

Groundwater in the Selwyn District is predominantly recharged by infiltrating rainwater recharge, accompanied by some seepage contribution from the Waimakariri River. Piezometric contours from Canterbury Maps indicate regional groundwater flow in the vicinity of Rolleston is generally to the south-east towards Te Waihora. This is supported by a PDP piezometric survey carried out over the subdivision area and surrounds in July 2026 and which is described in the PDP Westhaven Groundwater Level Report[7].

As described in Section 3, there are numerous intermittent springs present to the south of Selwyn Road, approximately 800 m from the southern-most boundary of the site. The springs are part of a broad spring zone extending to the south-west and south-east of the site, reflective of the shallow water table to the south.

4.2.1 Groundwater Levels

As per Figure 1, ECan long-term groundwater level monitoring bore M36/0465 (30.5 m deep) is situated around 1 km west of the nearest site boundary (Brookside Block) along Edwards Road. The full groundwater level record in this bore is shown in Figure 3, Appendix A. This bore has a groundwater level record dating from June 2000 through to present. Groundwater levels have generally been measured at monthly intervals for most of the record.

The record in M36/0465 indicates groundwater level fluctuations between 3.13 m and 11.84 m bgl at the location of the bore. A seasonal pattern of generally higher levels in late winter and early spring versus lower levels in late summer and early autumn is evident in the data. The highest measurement on record of 3.13 m bgl occurred on 25 August 2022.

PDP is monitoring groundwater levels in four newly drilled bores (BH-001 through BH-004) within the Skellerup and Skellerup South blocks. The locations of these bores are shown in Figure 1. The PDP Westhaven Groundwater Level Report summarises that monitoring and also provides an estimate of the highest groundwater levels across the site. Those predictions are based on a piezometric survey carried out across the site and surrounds in July 2026 and correlation of measured groundwater levels against the long-term record in M36/0465. The groundwater level assessment estimates that under the expected highest groundwater level conditions, the depth to groundwater varies between approximately 10.5 m bgl and 7 m bgl in the Holmes Block, and between

[6] Canterbury Maps. https://mapviewer.canterburymaps.govt.nz/
[7] Pattle Delamore Partners. (October 2026). Westhaven Residential Development Fast-track Substantive Application – Groundwater Level Assessment.

approximately 6.5 m bgl in the north of the Brookside Block, reducing to around 1.5 m bgl in the south of the Skellerup South Block (adjacent to Selwyn Road). The predicted highest groundwater levels at the site (shallowest depth to groundwater) are presented in Figure 4, Appendix A.

4.2.2 Groundwater Use

The ECan online wells database identifies 374 bores located within a 2 km radius of the site. However, of these, 273 bores are recorded as active and existing, with the recorded status of the remaining 101 (non-active) bores varying between altered, buried/unlikely still exists, capped/semi-permanent, filled in, land parcel proposed, no info expired bore consent, not drilled, not used, proposed, sealed/grouted up and unlawfully established. Of the active bores recorded on ECan's database, Table 1 summarises the number of bores per recorded use category.

Table 1: Active bores within a 2 km radius

Primary Use	No. of Bores
Domestic Supply or Domestic and Stockwater	160
Irrigation	64
Water Level Observation	21
Stock Supply	10
Groundwater Quality	9
Commercial / Industrial	4
Dairy Use	4
Blank	1
Total	**273**

Notes:

1. *Sourced from Canterbury Maps (21 July 2026).*

We note some bores also have secondary uses, including for drinking-water purposes. In total, there are 94 bores within 2 km of the site which have use information indicating they may be used for drinking-water supply. However, this includes deep bores which are not expected to be affected by the dewatering activities that will occur at the site.

Shallow bores for the purpose of our assessments are assumed to be 30 m deep or less and there are up to 32 bores in this depth range (assuming those with no depth data are also shallow) that are potentially used for drinking-water supply.

The Selwyn District Council (SDC) Raven Drive community water supply is sourced from bore M36/4699 (123 m deep) located approximately 2 km south-east from the southern boundary of the site. The Community Drinking-water Protection Zone (CDWPZ) extends in a 100 m radius from the bore as shown in Figure 1. The next closest CDWPZs and SDC community water supply bores are Rolleston Township supply bores situated to the north-east of the site (Figure 1). These bores are all over 180 m deep.

5.0 Proposed Onsite Works and Estimation of Abstraction Rates

Dewatering is required for installation of the shallow wastewater pipework beneath the proposed roading network and associated pump station installation. However, given groundwater level measurements at the site and the predictions of the highest groundwater level conditions in the PDP Groundwater Level Report, it is likely that dewatering will only be required within the Skellerup and Skellerup South blocks.

The installation of underground pipework is expected to occur over shorter duration than the pumping station, with typical trench lengths open at any one time being up to 100 m to allow for pipework lengths between manholes to be inspected prior to backfilling. Further details of the excavation extents and dewatering requirements are provided in Section 5.1. While no contractor has yet been appointed and the detailed dewatering methodology has not been confirmed, dewatering will be undertaken by pumping to lower groundwater ahead of excavation. Abstraction rates and potential effects have been assessed on that basis.

5.1 Dewatering Abstraction Rates

Figure 4, Appendix A, also shows the location of two proposed pump stations which are located along the southern boundaries of both the Holmes and Skellerup South blocks. During construction, dry working conditions will be required at the base of the excavations and therefore groundwater will be lowered to approximately 0.5 m below the excavation depth.

Based on the estimated minimum depth to groundwater in the Holmes Block (approximately 7 m bgl at the location of the pumping station) and the proposed maximum excavation depth of 4.5 m bgl, dewatering is not anticipated to be required during construction works for the Holmes Block pump station and associated pipework.

In the Skellerup South Block, Figure 4 indicates the estimated shallowest depth to groundwater at the proposed pumping station site is around 1.5 m bgl. We have been informed that trenching for the installation of the wastewater pipework is expected to occur to a maximum depth of 4 m bgl and excavation for

the pump station in this area is expected to occur to a maximum depth of 6 m bgl.

With regard to the hydraulic conductivity (K) of the strata being dewatered, we note Canterbury Maps shows there are three shallow bores (all screened above 42 m bgl) and situated between 210 and 1,850 m from the site with constant rate aquifer testing results. The reported transmissivity (T) values are 1,940 m^2/day (M36/0027), 2,400 m^2/day (M36/0450) and 1,200 m^2/day (BX23/0634). Based on the recorded well screen and water level depths in these bores, K estimates of 35 m/day (BX23/0634), 82 m/day (M36/0027) and 140 m/day (M36/0450) can be made. In addition, a T value of 1,460 m^2/day can be estimated using an empirical relationship between the specific capacity of a bore and T derived from pumping tests in Canterbury (Bal, 1996)[8]. The derived value is based on specific capacity data (yield per unit of drawdown) from shallow bores within 2 km of the site. Assuming a saturated thickness of 30 m, a K of 49 m/day is estimated from the Bal T value.

Based on the information summarised above, and to predict dewatering flow rates we have assumed that the shallow strata being dewatered has a K value of 100 m/day. We expect the adopted value is conservatively high, given that bore logs in the area (Appendix C) indicate there are likely finer grained strata (including clay) described in the matrix of the shallow gravelly strata at the site.

5.1.1 Dewatering Rates for Trenching

Based on the highest predicted groundwater levels, the proposed trenching could theoretically require drawing the water table down by 2.5 m to the base of the excavation with a further 0.5 m of drawdown required to achieve a level 0.5 m below the excavation depth. Therefore, the maximum potential drawdown required for trenching is 3 m. In reality, excavation is not expected to coincide with high groundwater level conditions, however for estimation of dewatering rates we have conservatively assumed that up to 3 m of drawdown during construction may be required.

To estimate the potential dewatering rates for trenching for the installation of the wastewater pipe network, the online ECan tool for dewatering a narrow trench in an unconfined aquifer has been used (GHD, 2024[9]). The input parameters for the trench model are shown in Figure 5, Appendix A. For the 4 m deep trenching excavations, the following inputs have been assumed to predict the maximum dewatering rates:

[8] Bal, A. A.; (1996) Valley fills and coastal cliffs buried beneath an alluvial plain: evidence from variation of permeabilities in gravel aquifers, Canterbury Plains, New Zealand. Journal of Hydrology (NZ) Vol 35, No. 1 (1996), p.p. 1-27.

[9] https://www.ecan.govt.nz/do-it-online/resource-consents/applying-for-resource-consent/preparing-your-application/tools-and-resources

- Groundwater levels are variable across the Southern Block, and it has been assumed that groundwater levels are 1.5 m below ground surface in order to provide a conservative assessment (as per PDP, 2026). The works are actually most likely to occur during the summer/autumn months when groundwater is at its lowest.
- Excavation depth of 4 m bgl (maximum depth indicated by Inovo).
- Pumped water table depth below the base of excavation footprint of 0.5 m (ECan guidance default).
- Thickness of groundwater intake of 0.5 m (ECan guidance for sump pumps).
- Assumed hydraulic conductivity of 100 m/day (as per Section 5.1).
- Storage coefficient of 0.1 (typical value for unconfined aquifers).
- Duration of dewatering of 30 days (ECan guidance maximum).
- Excavation dimensions of 100 m by 2 m (assuming a maximum of 100 m of trench will be open and actively dewatered at any one time).

The results of the assessment indicate a dewatering rate of around 10 L/s after 30 days of continuous pumping, however higher dewatering rates of up to 27 L/s are predicted initially to draw down groundwater levels to the required level.

5.1.2 Skellerup South Pump Station

Dewatering requirements have been estimated for the proposed Skellerup South Block pump station based on the ECan dewatering tool and the same general assumptions as per the estimates for the pipework trenching (Figure 6, Appendix A). However, the following inputs specific to the pump station infrastructure are provided below:

- A pit modelled as 15 m by 10 m.
- Excavation depth of 6 m bgl (maximum depth indicated by Inovo).

The results indicate that for pit excavation the estimated dewatering rates could initially be around 38 L/s, reducing to around 25 L/s after 30 days (note this excavation can be expected to be complete within a period of 10-12 weeks).

Construction works for the pump station along Selwyn Road in the Southern Block are scheduled to take place early within the site's development, whereas the rest of the subdivision works (i.e., trenching for pipework installation) expected to take place after the pump station excavation works are complete. As such, the dewatering activities are not expected to occur concurrently.

Based on these assessments, the applicant is applying to take up to 38 L/s for dewatering purposes. This is expected to be a conservative upper estimate based on assuming groundwater levels will be at the highest expected levels during the works (not realistic). However, there is always uncertainty in predicting dewatering rates and therefore it is important that the upper limits of take on a consent are not too low.

6.0 Assessment of Effects

6.1 Dewatering

The taking and use of groundwater for dewatering and the associated discharge of that water is a permitted activity under Rule 5.119 of the LWRP provided all the conditions of the rule are complied with.

However, in this situation, Condition 1 (relevant to duration) is not be met and therefore resource consent is required under Rule 5.120 of the plan. Under Rule 5.120 the activity is considered a restricted discretionary activity and ECan's discretion is limited to the following matters:

1. The actual and potential environmental effects of not meeting the condition or conditions of Rule 5.119; and
2. Any adverse effects on Ngāi Tahu values or on sites of significance to Ngāi Tahu, including wāhi tapu and wāhi taonga; and
3. The potential adverse effects on any Critical Habitat.

With regard to matters of discretion 2 and 3 set out above, we are aware that an assessment on cultural values has been carried out as part of the planning assessment by Novo Group[10] and is included amongst accompanying consent application documents. In addition, there are no areas of Critical Habitat at the site.

As a result, matters of discretion 2 and 3 are assumed to be addressed and this report focusses on assessment against the specific conditions of Rule 5.119 of the LWRP (matter of discretion 1). Each specific condition of rule 5.119 is set out in bold below and underlying each condition, a specific assessment relevant to the individual condition is provided.

Condition 1 – The take continues only for the time required to carry out the work but the take will not last for a period exceeding 6 months – [DOES NOT COMPLY]

[10] Novo Group. October 2026. Assessment of Environmental Effects for the Westhaven Residential Development.

Dewatering works associated with excavation for the pump station is indicated to occur for approximately 10 – 12 weeks. However, dewatering works across the site for the purpose of trenching will occur over a long timeframe (but not continuously) as the full construction works will occur in stages over many years. Therefore, the total period over which dewatering may be required will exceed 6 months so this condition will not be met. Based on the above, consent is sought for a period of 15 years.

Overall, dewatering is not continuous and when dewatering is occurring it will occur for relatively limited periods and only during specific stages of construction. As a result, the potential environmental effects of not meeting this condition are considered less than minor.

Condition 2 – The take or discharge is not from, into, or onto contaminated or potentially contaminated land – [COMPLIES]

EHS Support New Zealand Ltd, 2025[11] has undertaken a Detailed Site Investigation (DSI) of the Skellerup and Skellerup South blocks which indicates the wider site is generally free of significant contamination[12]. The DSI included collection of 29 soil samples over the Skellerup and Skellerup South block areas and analysis for concentrations of heavy metals. None of the sample results exceeded background concentrations and therefore it is assumed the site would be considered to be 'not contaminated'. Therefore Condition 2 is considered to be met.

Condition 3 - The take does not lower the groundwater level more than 8 m below the ground level of the site or cause subsidence of any other sites – [COMPLIES]

Only minimal localised lowering of the water table will be required to allow for the construction of the wastewater infrastructure as follows:

- Around 5 m below the highest estimated groundwater level at the southern pump station location and up to 6.5 m bgl.
- Up to around 3 m below the highest estimated groundwater level for wastewater pipework trenches and up to 4.5 m bgl.

Based on the above, groundwater levels will not be lowered more than 8 m below ground level at the site, meeting the first requirement of this condition.

Regarding subsidence, the record from long-term monitoring bore M36/0465 (Figure 3) indicates that groundwater levels have fluctuated between 3.13 m and

[11] EHS Support New Zealand Ltd. 2025. *West Rolleston Residential – Skellerup Block – Detailed Site Investigation*. Report Reference no. NZL.07183. Prepared for West Rolleston Residential Ltd. 9 October 2025.
[12] Note, a copy of this DSI is attached as Appendix F to the EHS Support New Zealand DSI – 23 October 2026. Prepared for the Fast-track Substantive application.

11.84 m bgl at the location of the bore. As outlined in the Groundwater Assessment report (PDP, 2026), the long-term monitoring record for bore M36/0465 has been used to calculate synthetic water level records for the onsite bores. The synthetic water level record for BH-004, located in the southwestern corner of the Skellerup South Block, indicates that the groundwater levels at the bore are expected to fluctuate between approximately 1.6 and 8.1 m bgl.

As discussed in Section 4.1, topsoil up to 0.4 m thick may be encountered during excavations, underlain by dominantly gravel based strata thereafter. Therefore, the available soils and groundwater level data shows that groundwater levels can be expected to naturally fall below the proposed dewatering depths and the strata that will be dewatered are expected to be clast supported gravel-based deposits. Based on the above, dewatering related settlement is not likely to occur.

Based on the information above, Condition 3 of Rule 5.119 will be met.

Condition 4 - The take does not have a moderate, high or direct stream depletion effect on a surface waterbody, determined in accordance with Schedule 9, unless the abstracted groundwater is being discharged into the surface waterbody to which it is hydraulically connected. – [COMPLIES]

The nearest surface water bodies to the proposed activity are the water races which traverse the site, as outlined in Section 3.0 and shown in Figure 1, Appendix A. However, as also discussed previously, the water race that enters the site in the Brookside Block and terminates in the south of the Skellerup South Block will be removed in the early stages of development. Therefore, dewatering at the site will mostly be situated at significant distances from water races. If dewatering is required in the south-west of the Brookside Block, then it may occur in relatively close proximity to the race that aligns with the south eastern boundary of the Brookside Block. However, the depth to groundwater in the Brookside Block (even under the estimated highest conditions) will be much lower than the base of the water race.

Based on the depth to groundwater over the site area, there will be no water races close to any potential dewatering areas that we consider would be hydraulically connected to groundwater. As a result, the closest surface water body (hydraulically connected to groundwater) is Baileys Creek, approximately 600 m to the south of the Skellerup South Block. Baileys Creek emerges at this location and flows away from the site, therefore stream depletion solutions are not suitable for determining the hydraulic connection with this water body as per the methodology provided in Schedule 9. However, taking into account the stream geometry and given the significant separation distance, we consider the hydraulic connection with Baileys Creek will be low. In addition, irrespective of the potential degree of connection, dewatering flows at the site will be discharged back to ground.

The expected high permeability of the shallow strata at the site means discharging dewatering flows to ground via test pits is expected to be straightforward. Under this scenario, the same water that is abstracted would be discharged back to ground and therefore the proposal would represent a non-consumptive take. The discharge back to ground negates any potential for stream depletion, particularly at a distance of at least 600 m from the site. As a result, this condition is considered to be met.

Condition 5 - An assessment of interference effects, undertaken in accordance with Schedule 12, does not show that any community, group or private drinking-water supply bore will be prevented from taking any water – [COMPLIES]

Dewatering at the site is not expected to prevent any community, group or private drinking-water supply bores from taking groundwater. This is based on the results of the assessment summarised below.

As discussed previously for the assessment under Condition 3, the depth of dewatering at this site is relatively limited, mostly requiring lowering of the water table to a maximum of 4.5 m bgl for trenches and the excavation for the pumpstation where the water table may be lowered to up to 6.5 m bgl.

We have carried out a very conservative assessment that assumes dewatering will occur under the highest expected groundwater level conditions at the site (very unlikely) and therefore our assessment also assumes dewatering rates that are likely higher than what will be required (as per the predictions in Section 5.1). We note that the LWRP Schedule 12 assessment methodology requires assessment at times when groundwater levels are low. Based on the expected range in groundwater levels at this site, it is possible that at times of low groundwater levels, dewatering may not be required. If dewatering is required under low groundwater level conditions, then the dewatering rates can be expected to be significantly less than those that have been assessed. This highlights the highly conservative nature of our assessment methodology.

Condition 5 of Rule 5.119 is concerned with effects in drinking-water bores only and the ECan wells database indicated there are a total of 143 drinking-water bores in a depth range from 0 to 50 m deep situated within 2 km of the site boundaries. Bores deeper than 50 m are not included in our assessment as the proposed onsite dewatering is unlikely to have any significant impact on these bores. This is supported by the Schedule 12 data check tool which indicates the majority of bores in the area are around 50 m deep or less. Bores deeper than 50 m will have significant amounts of available drawdown and are much less susceptible to drawdown interference effects.

Figure 7, Appendix A shows the location of the shallow drinking-water bores within 2 km of the site. We note that Schedule 12 of the LWRP requires that bores being assessed adequately penetrate the aquifer. The methodology to determine an adequately penetrating bore is as follows:

a. Either a depth below the calculated minimum water level, or below the level to which 50 % of bores within 2 km penetrating the aquifer are already established at 1 January 2002, whichever is the deeper; or

b. A depth determined by the application of the best available technical information and/or advice to be an adequate penetration depth.

There are 168 bores less than 50 m depth within 2 km of the site with drill dates prior to 1 January 2002. The median depth of these bores is 29 m bgl which is considered the appropriate adequate penetration depth for our drawdown interference assessment based on the methodology given in a. above.

The orange triangle markers in Figure 7 show the location of bores that are equal to or less than 29 m deep, whereas the markers for bores greater than this depth and up to 50 m deep are shown as purple circles. In total there are 42 drinking-water bores within 2 km of the site with depths equal to or less than 29 m, although 6 of these bores have no recorded depth (so actual depth could be less than or greater than 29 m). The remaining 101 shallow drinking-water bores are all greater than 29 m deep, indicating that most bores are deeper than the adequate penetration depth, likely to maximise reliability of supply and because deeper bores are likely to have higher water quality.

Figure 7 also shows the SDC water supply network, which indicates that many of the properties to the east and west of the proposed development are serviced by a reticulated public water supply. Many of the bores to the east of the site may no longer be used for drinking water purposes as this area has undergone further development and it is assumed that the SDC water supply network has been extended into this area despite the available GIS layers not being updated.

There are relatively few water-supply bores less than 29 m deep (where a SDC water supply connection is not present) in close proximity to the site. Most are at distances whereby any drawdown from the proposal is likely to be small.

It is also important to note that Figure 7 shows bores within 2 km of the entire development area. However, dewatering is only expected to be required (if required at all) in the southern blocks of the site where groundwater levels are shallower. Therefore, the actual number of shallow bores within 2 km of the areas that may need dewatering is less than that indicated by Figure 7. In reality, shallow bores north of SH1 will be significantly greater than 2 km from any dewatering.

Because the site is very large (~263 ha) and dewatering may potentially occur over a large area of the southern blocks (for service trenching), it is not practical to carry out Schedule 12 assessments of abstraction at all areas where dewatering will occur. Therefore, we have carried out three individual Schedule 12 assessments that have been used to determine the potential sensitivity of shallow bores to drawdown interference (not directly assess the effects of this proposal at all potential dewatering locations). For the assessments we have assumed three virtual pumping bores as shown in Figure 7 where the virtual bore markers are yellow squares. These sites are summarised as:

- Pump station bore: NZTM 5168522, 1549506; 6.5 m deep; pumping rate of 38 L/s
- Brookside bore: NZTM 5169768, 1547934; 4.5 m deep; pumping rate of 27 L/s
- Skellerup South bore: NZTM 5169093, 1549554; 4.5 m deep; pumping rate of 27 L/s

We note the assumed Brookside Block bore is located in the west of that block where the PDP Groundwater Level Report indicates groundwater levels are shallowest. We expect it is unlikely that dewatering will be required in the north and east of the Brookside Block and therefore an assessment has not been provided in that area. If dewatering is required in those areas, then the PDP Groundwater Level Report indicates under the highest expected groundwater level conditions, less than 1 m of drawdown will be required. Under those conditions the flow rates will be significantly less than what has been assumed at the adopted assessment locations.

Another level of conservatism to our assessment is that we have used the maximum rates estimated in Section 5.1 of this report, whereas over the majority of the dewatering lower rates are likely to be required after the initial rapid drawdown of the excavations.

The Schedule 12 assessment discussed above has been carried out as follows:

- The transmissivity (T) of the strata between the water table and a depth of 30 m below ground level is assumed to be 1,460 m^2/day.
- A typical unconfined storage coefficient (S) of 0.1 is assumed.
- The Theis (1935)[13] solution has been used to calculate drawdown in the aquifer.
- 7 day and 84 day simulations have been carried out.

[13] Theis, C.V.; (1935) The relation between the lowering of the piezometric surface and the rate and duration of discharge of a well using groundwater storage. Transactions American Geophysical Union, 16, 519-524.

- An adequate penetration depth of 29 m bgl was adopted using the methodology provided in Schedule 12 of the LWRP.
- A cut off depth of 50 m bgl has been adopted.

The assumed transmissivity is consistent with the pump testing information and Bal T estimates detailed in Section 5.1 of this report.

We have been informed that dewatering for the pumping station may be required for up to 12 weeks, which corresponds to the 84-day assessment period. This duration has also been adopted for the trenching, however in reality we expect trenching will occur more quickly in any one location and move across the site relatively rapidly.

The conservative Schedule 12 assessment shows that the anticipated drawdown as a result of dewatering activities on site is not likely to cause effects greater than allowed for by the assessment criteria. For the pumping station and Skellerup South Block trenching assessments there are two bores that show as affected in the output files, however these are both water level observation bores and therefore do not need to be considered. The Schedule 12 assessment outputs are provided in Appendix D.

Further to the information provided above and as discussed in the previous section relevant to Condition 4 of Rule 5.119, dewatering discharges will be back to ground at this site. Therefore, all of the water being abstracted will go back to groundwater. This is another (and likely the most significant) layer of conservatism relative to the assessments carried out. In reality any drawdown interference effects will be significantly less than predicted by our assessments.

Based on the assessments outlined above, we consider the potential effects on neighbouring drinking-water supply bores are less than minor and the proposal meets Condition 5 of Rule 5.119.

Condition 6 - At the point and time of any discharge to surface water, the rate of flow in the river or artificial watercourse is at least five times the rate of the discharge – [COMPLIES]

There will be no dewatering discharges to surface water as dewatering flows will be discharged to ground. Therefore this condition is met.

Condition 7 - The concentration of total suspended solids in any discharge to a surface waterbody does not exceed: [COMPLIES]

(a) 50 g/m^3 where the discharge is to any spring-fed river, Banks peninsula river, or to a lake or wetland; or

(b) 100 g/m^3 where the discharge is to any other river or to an artificial watercourse.

This condition is met as there will be no dewatering discharges to surface water.

Condition 8 - The discharge after reasonable mixing with the receiving waterbody meets the visual clarity standards in Schedule 5 [COMPLIES]

This condition is also met as all discharges will be back to ground rather than to surface water

Condition 9 - The point of discharge is not within a Community Drinking-water Protection Zone as set out in Schedule 1 – [COMPLIES]

Figure 1 shows that the nearest CDWPZ is for SDC supply bore M36/4699 which is approximately 2 km southeast of the site. Any points of discharge to ground at the site will not be within the CDWPZ. As such, the proposal will comply with Condition 9 of Rule 5.119.

Summary

Although Condition 1 of Rule 5.119 will not be met by the proposal, the information provided above has shown that the effects of not meeting this condition are less than minor.

7.0 Conclusion

Assessment of effects relating to the proposed take, use and discharge of groundwater for dewatering purposes during construction of a predominantly residential subdivision at Rolleston has been carried out.

Assessments have been carried out against each of the conditions of LWRP permitted activity Rule 5.119 relating to dewatering. These assessments indicate Condition 1 of Rule 5.119 is not met which means resource consent is required under Rule 5.120. However, the actual effects of not meeting the condition of Rule 5.119 have been found to be less than minor. As a result, the proposal meets the first matter of discretion under Rule 5.120 of the LWRP. In addition, the proposal is consistent with all other matters of discretion under Rule 5.120. Therefore, it is appropriate for the consent applications to take, use and discharge groundwater for construction dewatering purposes to be granted.

Appendix A: Figures

© 2026 Pattle Delamore Partners Limited

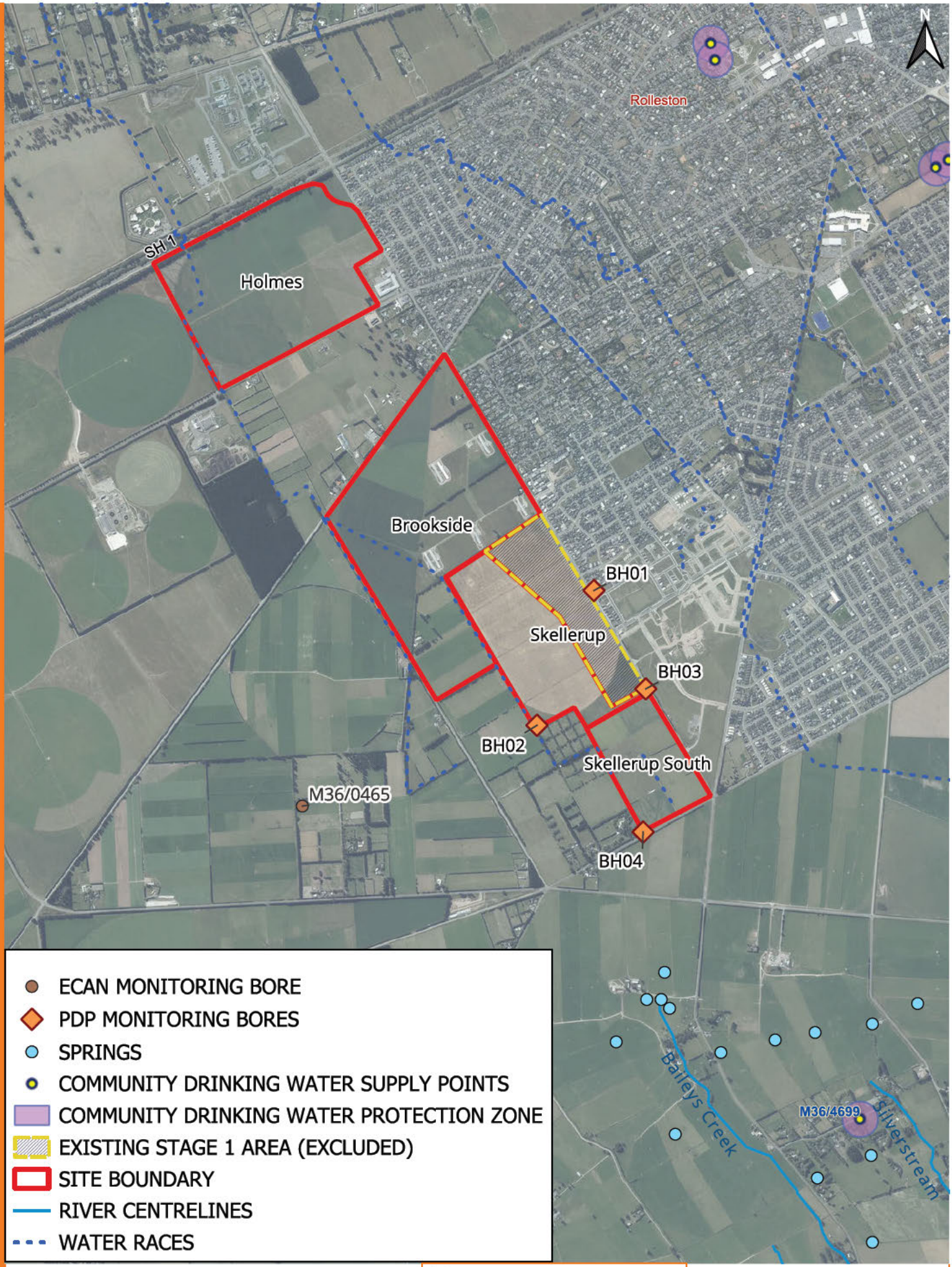

FIGURE 1: SITE SETTING

WESTHAVEN ROLLESTON DEWATERING ASSESSMENT

NOTES:
1. AERIAL IMAGERY SOURCED FROM THE LINZ DATA SERVICE [https://data.linz.govt.nz] AND LICENCED BY LINZ FOR RE-USE UNDER THE CREATIVE COMMONS ATTRIBUTION 4.0 INTERNATIONAL LICENCE.

THIS DRAWING REMAINS THE PROPERTY OF PATTLE DELAMORE PARTNERS LTD AND MAY NOT BE REPRODUCED OR ALTERED WITHOUT WRITTEN PERMISSION. NO LIABILITY SHALL BE ACCEPTED FOR UNAUTHORISED USE OF THE DRAWING

0 500 1,000 m
METRES
SCALE : 1:27,500.0[illegible]42

REVISION: 01 | DATE: 10/26 | BY: AW
CLIENT: CARTER GROUP LTD

© 2026 Pattle Delamore Partners Limited

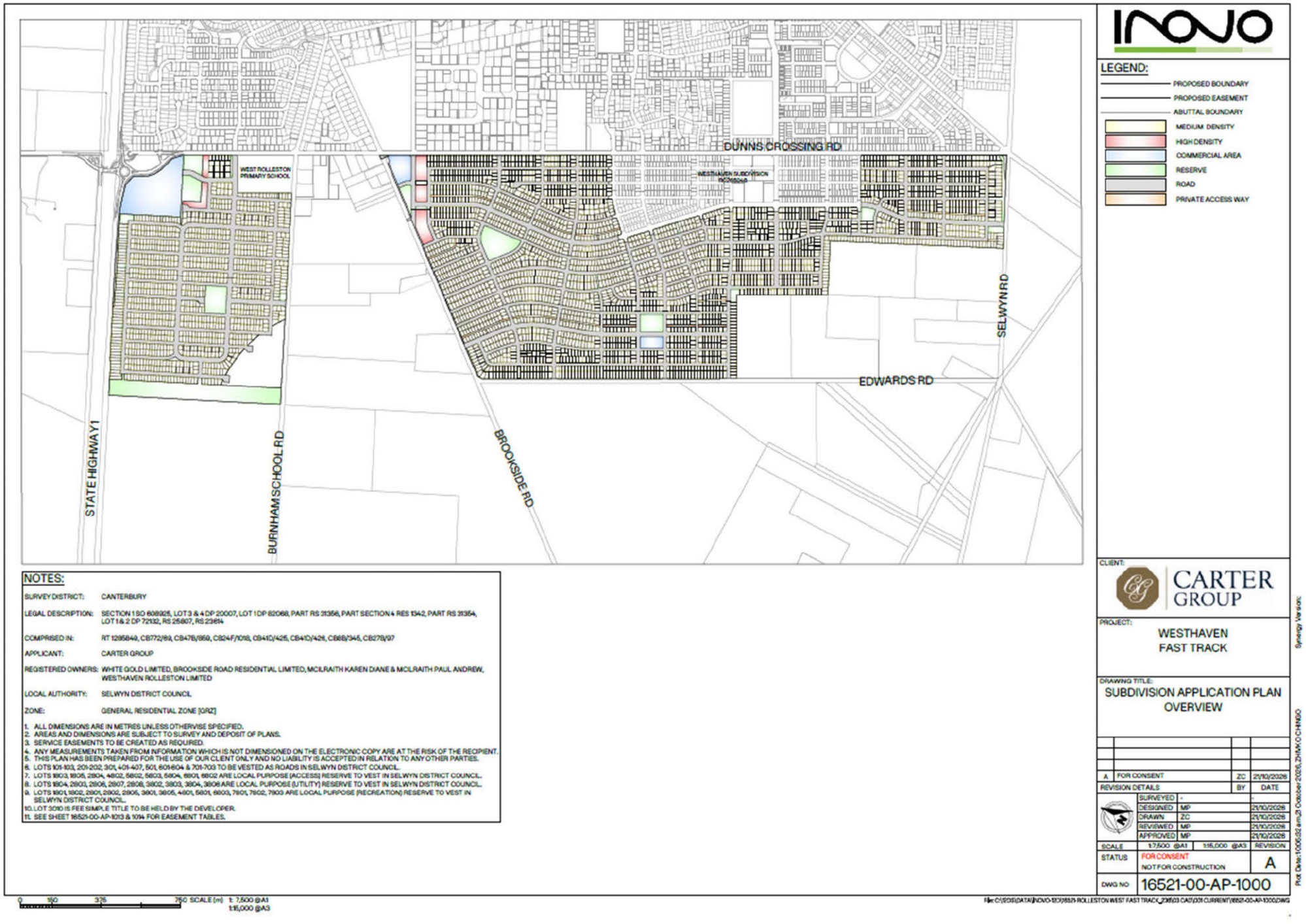

LEGEND:

- PROPOSED BOUNDARY
- PROPOSED EASEMENT
- ABUTTAL BOUNDARY
- MEDIUM DENSITY
- HIGH DENSITY
- COMMERCIAL AREA
- RESERVE
- ROAD
- PRIVATE ACCESS WAY

NOTES:

SURVEY DISTRICT:	CANTERBURY
LEGAL DESCRIPTION:	SECTION 1 SO 508935, LOT 3 & 4 DP 20007, LOT 1 DP 82068, PART RS 31356, PART SECTION 4 RES 1342, PART RS 31354, LOT 1 & 2 DP 72132, RS 25807, RS 23614
COMPRISED IN:	RT 1295849, CB772/69, CB47B/869, CB24F/1018, CB41D/425, CB41D/426, CB6B/345, CB27B/97
APPLICANT:	CARTER GROUP
REGISTERED OWNERS:	WHITE GOLD LIMITED, BROOKSIDE ROAD RESIDENTIAL LIMITED, MCILRAITH KAREN DIANE & MCILRAITH PAUL ANDREW, WESTHAVEN ROLLESTON LIMITED
LOCAL AUTHORITY:	SELWYN DISTRICT COUNCIL
ZONE:	GENERAL RESIDENTIAL ZONE [GRZ]

1. ALL DIMENSIONS ARE IN METRES UNLESS OTHERWISE SPECIFIED.
2. AREAS AND DIMENSIONS ARE SUBJECT TO SURVEY AND DEPOSIT OF PLANS.
3. SERVICE EASEMENTS TO BE CREATED AS REQUIRED.
4. ANY MEASUREMENTS TAKEN FROM INFORMATION WHICH IS NOT DIMENSIONED ON THE ELECTRONIC COPY ARE AT THE RISK OF THE RECIPIENT.
5. THIS PLAN HAS BEEN PREPARED FOR THE USE OF OUR CLIENT ONLY AND NO LIABILITY IS ACCEPTED IN RELATION TO ANY OTHER PARTIES.
6. LOTS 101-103, 201-202, 301, 401-407, 501, 601-604 & 701-703 TO BE VESTED AS ROADS IN SELWYN DISTRICT COUNCIL.
7. LOTS 1803, 1805, 2804, 4802, 5802, 5803, 5804, 6801, 6802 ARE LOCAL PURPOSE (ACCESS) RESERVE TO VEST IN SELWYN DISTRICT COUNCIL.
8. LOTS 1804, 2803, 2806, 2807, 2808, 3802, 3803, 3804, 3806 ARE LOCAL PURPOSE (UTILITY) RESERVE TO VEST IN SELWYN DISTRICT COUNCIL.
9. LOTS 1801, 1802, 2801, 2802, 2805, 3801, 3805, 4801, 5801, 6803, 7801, 7802, 7803 ARE LOCAL PURPOSE (RECREATION) RESERVE TO VEST IN SELWYN DISTRICT COUNCIL.
10. LOT 3010 IS FEE SIMPLE TITLE TO BE HELD BY THE DEVELOPER.
11. SEE SHEET 16521-00-AP-1013 & 1014 FOR EASEMENT TABLES.

CLIENT: CARTER GROUP

PROJECT: WESTHAVEN FAST TRACK

DRAWING TITLE: SUBDIVISION APPLICATION PLAN OVERVIEW

A	FOR CONSENT	ZC	21/10/2026
REVISION DETAILS		BY	DATE
	SURVEYED	-	-
	DESIGNED	MP	21/10/2026
	DRAWN	ZC	21/10/2026
	REVIEWED	MP	21/10/2026
	APPROVED	MP	21/10/2026
SCALE	1:7,500 @A1	1:15,000 @A3	REVISION
STATUS	FOR CONSENT NOT FOR CONSTRUCTION		A
DWG NO	16521-00-AP-1000		

Plot Date: 10:06:32 am, 21 October 2026, ZHMX OCHINOO

File: C:\EDGS\DATA\INOVO-SITE\16521-ROLLESTON WEST FAST TRACK_23\03 CAD\03 CURRENT\16521-00-AP-1000.DWG

Synergy Version:

Figure 2: Development Layout Provided by Inovo (21 October 2026).

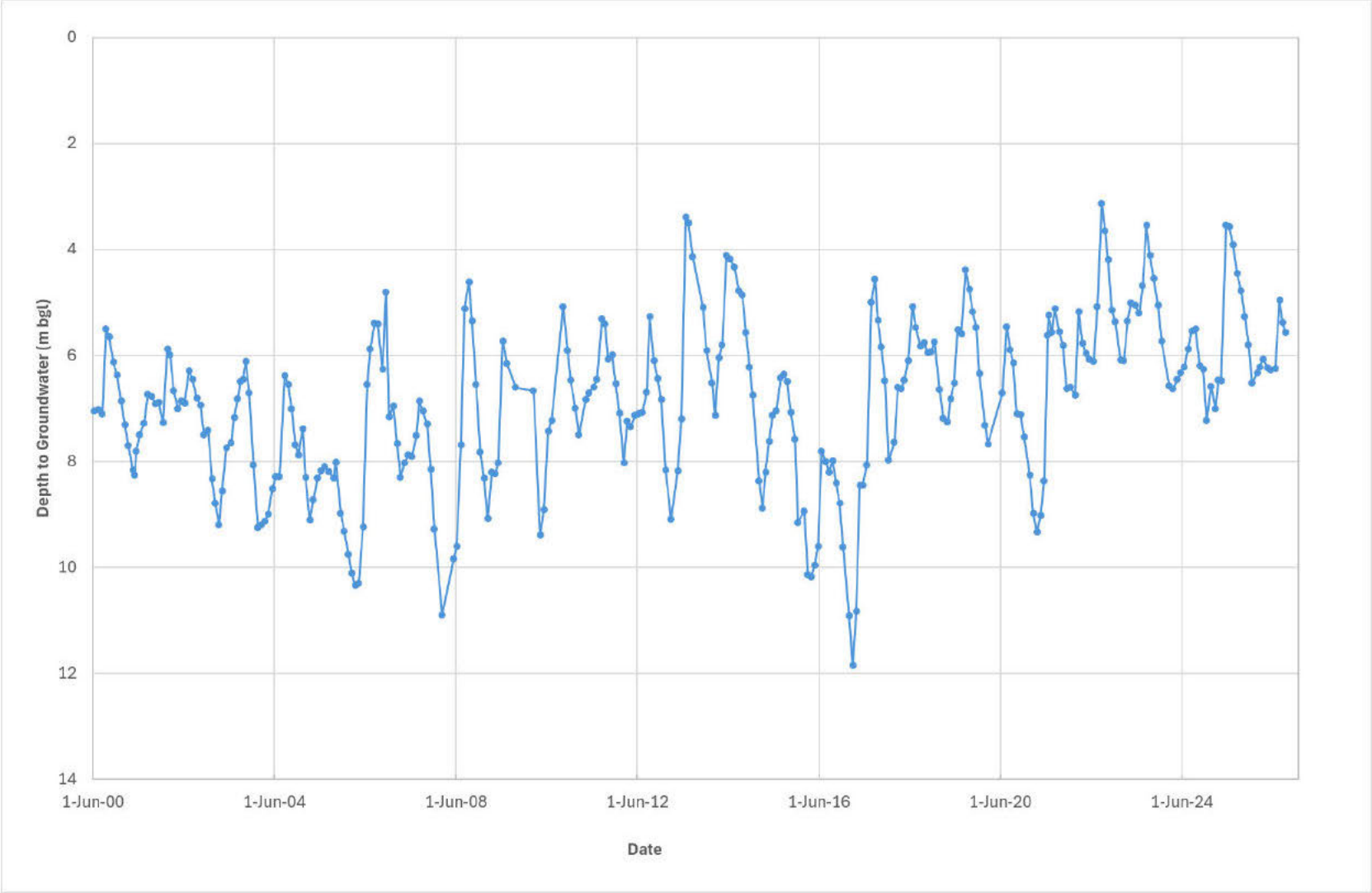

Figure 3: ECan Monitoring Bore M36/0465 Groundwater Level Record (14 June 2000 – 17 September 2026).



FIGURE 4: ESTIMATED SHALLOWEST DEPTH TO GROUNDWATER

WESTHAVEN ROLLESTON DEWATERING ASSESSMENT

NOTES:
1. AERIAL IMAGERY SOURCED FROM THE LINZ DATA SERVICE [https://data.linz.govt.nz] AND LICENCED BY LINZ FOR RE-USE UNDER THE CREATIVE COMMONS ATTRIBUTION 4.0 INTERNATIONAL LICENCE.

THIS DRAWING REMAINS THE PROPERTY OF PATTLE DELAMORE PARTNERS LTD AND MAY NOT BE REPRODUCED OR ALTERED WITHOUT WRITTEN PERMISSION. NO LIABILITY SHALL BE ACCEPTED FOR UNAUTHORISED USE OF THE DRAWING

0 250 500 m
METRES
SCALE : 1:16,500 (A4)

REVISION: 01 | DATE: 10/26 | BY: AW
CLIENT: CARTER GROUP LTD

© 2026 Pattle Delamore Partners Limited

Dewatering (Long narrow trench - Unconfined groundwater - No mitigation)

Generic Model Inputs

Static water table depth below ground	z_g	1.5	m	
Excavation depth below ground	z_e	4	m	
Target dewatering (water table) depth below ground	-	4.5	m	
Pumped water table depth below base of excavation footprint	z_i	0.5	m	
Thickness of groundwater intake (i.e. well screen)	h_w	0.5	m	
Modelled impermeable layer depth below ground	z_m	5	m	
Groundwater head above impermeable layer at R_0	H	3.5	m	
Drawdown from static water level within excavation footprint	s	3	m	
Mean hydraulic conductivity	K	100	m/d	
Maximum order of magnitude change in hydraulic conductivity	-	0	-	
Storage coefficient (use specific yield)	S	0.1	-	
Duration of dewatering (maximum modelled = 30 days)	t	30	d	
Distance from edge of excavation or dewatering bores	r	100	m	
Excavation length	a	100.0	m	
Excavation width	b	2.0	m	
Dewatering bore / well point spacing from excavation	c	1.0	m	
Length / width ratio (Rule 1)	a/b or b/a	50.0	-	
Okay to use model?	-	Yes	-	
Bore radius for calculation of flow to corners (Equation 4)	$r_{w\text{-}calc}$	1.00	m	

z_g must be < z_m Okay

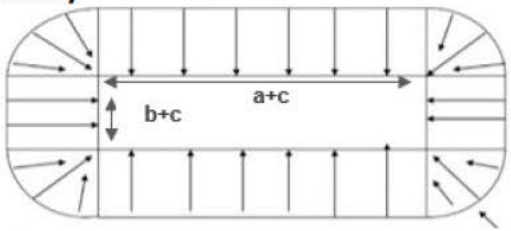

Default: 0.5 m

Default: Sump pump = 0.5 m, wells = 2 m

$z_m = z_e + z_i + h_w$. Must be >= actual depth to impermeable layer

$H = z_m - z_g$

H - h

Default: 0.1

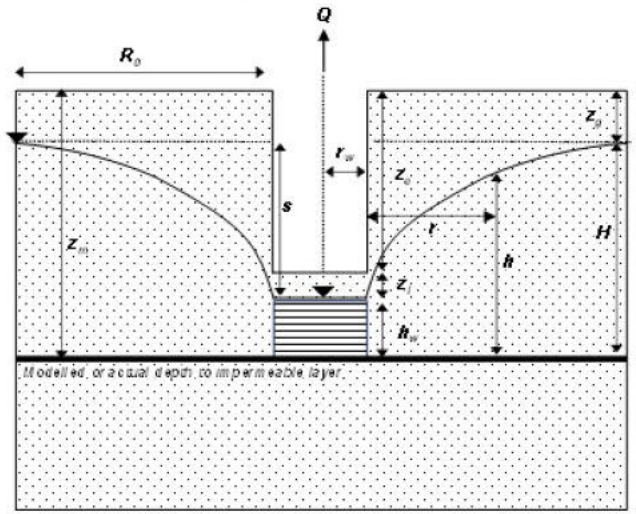

Required input

Formula or fixed

Error check

Figure 5: Trench Dewatering Inputs for ECan's Online Dewatering (Unconfined – Long Narrow Trench) Tool.

Dewatering (Well or Pit - Unconfined groundwater - No mitigation)

Generic Model Inputs			
Static water table depth below ground	z_q	1.5	m
Excavation depth below ground	z_e	6	m
Target dewatering (water table) depth below ground	-	6.5	m
Pumped water table depth below base of excavation footprint	z_i	0.5	m
Thickness of groundwater intake (i.e. well screen)	h_w	0.5	m
Modelled impermeable layer depth below ground	z_m	7	m
Groundwater head above impermeable layer at R_0	H	5.5	m
Drawdown from static water level within excavation footprint	s	5	m
Mean hydraulic conductivity	K	100	m/d
Maximum order of magnitude change in K	-	0	-
Storage coefficient (use specific yield)	S	0.1	-
Duration of dewatering (maximum modelled = 30 days)	t	30	d
Distance from edge of excavation	r	100	m
Excavation length	a	10.0	m
Excavation width	b	15.0	m
Dewatering bore / well point spacing from excavation	c	-	m
Length / width ratio (Rule 1)	a/b or b/a	1.50	-
Okay to use model?	-	Yes	-
Fixed excavation radius (Optional. Leave blank if unused)	$r_{w\text{-}fixed}$		m
Fixed or effective radius (Equation 2)	$r_{w\text{-}calc}$	8.0	m

Required input / Optional input — Calculated / Error check

z_q must be < z_m Okay

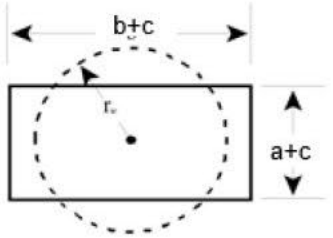

Default: 0.5 m

Default: Sump pump = 0.5 m, wells = 2 m

$z_m = z_e + z_i + h_w$. Must be <= actual depth to impermeable layer

$H = z_m - z_q$

H - h

Default: 0.1

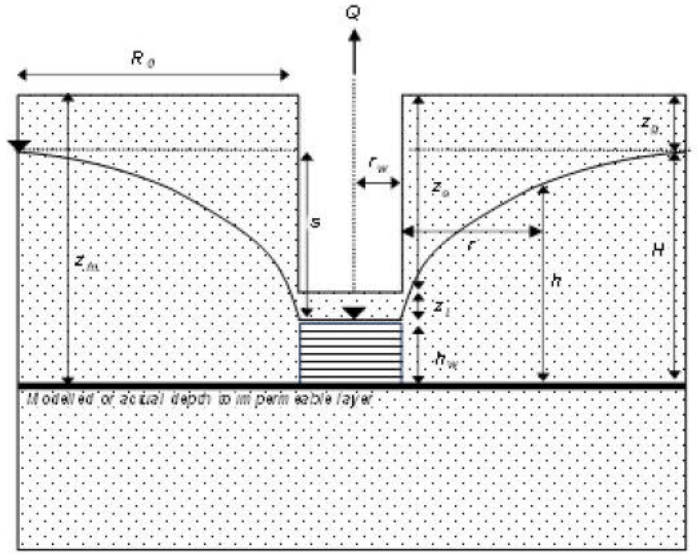

Figure 6: Pump Station Dewatering Inputs for ECan's Online Dewatering (Unconfined – Well or Pit) Tool.

© 2026 Pattle Delamore Partners Limited

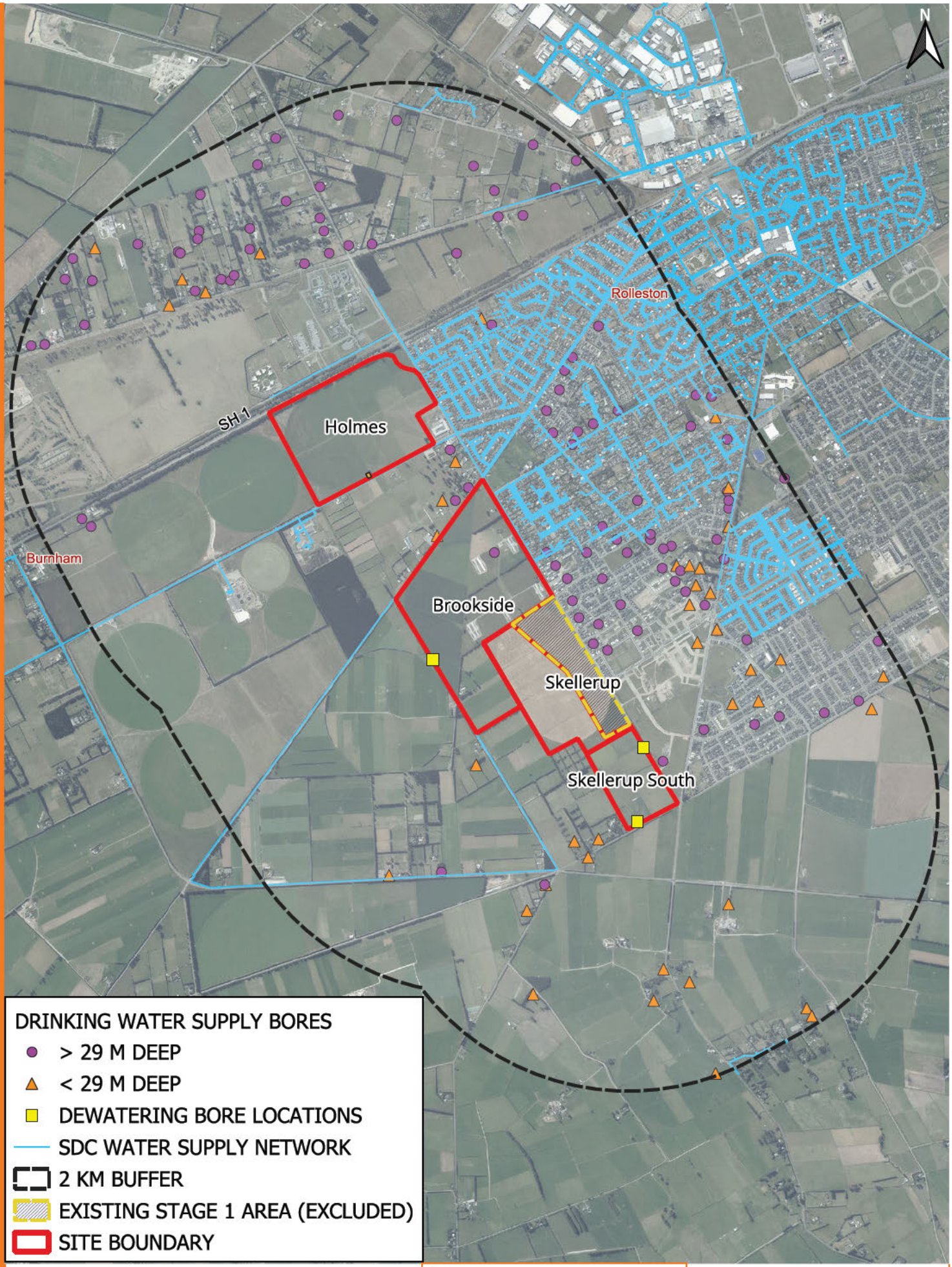

DRINKING WATER SUPPLY BORES
- > 29 M DEEP
- < 29 M DEEP
- DEWATERING BORE LOCATIONS
- SDC WATER SUPPLY NETWORK
- 2 KM BUFFER
- EXISTING STAGE 1 AREA (EXCLUDED)
- SITE BOUNDARY

pdp

FIGURE 7: LOCATION OF DRINKING WATER SUPPLY BORES

WESTHAVEN ROLLESTON DEWATERING ASSESSMENT

NOTES:
1. AERIAL IMAGERY SOURCED FROM THE LINZ DATA SERVICE [https://data.linz.govt.nz] AND LICENCED BY LINZ FOR RE-USE UNDER THE CREATIVE COMMONS ATTRIBUTION 4.0 INTERNATIONAL LICENCE.

THIS DRAWING REMAINS THE PROPERTY OF PATTLE DELAMORE PARTNERS LTD AND MAY NOT BE REPRODUCED OR ALTERED WITHOUT WRITTEN PERMISSION. NO LIABILITY SHALL BE ACCEPTED FOR UNAUTHORISED USE OF THE DRAWING

0 500 1,000 m
METRES
SCALE : 1:37,500 (A4)

REVISION: 01 | DATE: 10/26 | BY: AW
CLIENT: CARTER GROUP LTD

© 2026 Pattle Delamore Partners Limited

S:\CO5755\0002\PROJECT\CO5755000002.aprx

Appendix B: Curriculum Vitae

Hilary Lough

TECHNICAL DIRECTOR - WATER RESOURCES



Hilary is a Civil Engineer specialised in water resources management, in PDP's Christchurch Office. She is a Chartered Professional Engineer with experience in a wide range of environmental projects, including for water supply, wastewater, stormwater, landfills, quarries, mines, agricultural land use and irrigation, managed aquifer recharge, construction dewatering and hydropower. Hilary is recognised for her specialised skills in managing investigations and assessments relating to groundwater issues, including groundwater-surface water interaction, impacts of abstraction from and discharge to groundwater and contaminant transport through soil and groundwater.

Qualifications

B.E. (Hons) (Civil), University of Canterbury, 2002

M.E. (Civil), University of Canterbury, 2004

Affiliations

Chartered Professional Engineer (CPEng)

Professional Member of Engineering New Zealand (CMEngNZ)

Member of New Zealand Hydrological Society

Career Summary

2017 – Present
Technical Director - Water Resources, Pattle Delamore Partners Ltd, Christchurch

2004 – 2017
Environmental Engineer, Pattle Delamore Partners Ltd, Christchurch

2003 - 2004
Academic Tutor (Civil Engineering), University of Canterbury, Christchurch

2000 - 2003
Construction Management Assistant (Part Time), Fletcher Construction Company, Nelson/Wellington

CORE EXPERTISE

- Technical Peer Review of Consent Applications
- Groundwater Resource Evaluation and Modelling
- Groundwater-Surface Water Interaction Modelling
- Contaminant Transport Modelling in Soil and Water
- Assessment of Environmental Effects for Soil and Water
- Wastewater and Stormwater Management and Disposal

CAREER SUMMARY

Hilary is a professional engineer, experienced in resource consent work including peer review of applications and technical investigations, preparation and presentation of expert evidence at consent hearings and provision of technical advice to local government. Hilary is a technical director at PDP, providing co-ordination and technical oversight of the work undertaken by the strong team of water resources experts across the PDP offices. Hilary specialises in the modelling of groundwater resources, groundwater and surface water interaction and the transport of contaminants in soil and water.

PROJECT EXPERIENCE

Environment Canterbury, Technical Water Resources Advice (2004-present)
Technical Expert and Peer Review

Peer review of multiple applications and reports for Environment Canterbury including review of stream bed conductance investigations, stream depletion assessments, auditing groundwater consent applications and reviewing 763 groundwater and surface water consent applications to determine compliance with the Waimakariri River Regional Plan. Preparation of technical reports: "Vertical flow in Canterbury groundwater systems and its significance for groundwater management" and "Guidelines for the Assessment of Groundwater Abstraction Effects on Stream Flow". Audit of aquifer test results, groundwater consent and contaminant discharge applications including providing evidence at consent hearings. Assessment of effects for managed aquifer recharge projects.

Hawke's Bay Regional Council, Technical Water Resources Advice (2012-present)
Technical Expert and Peer Review

Technical reviews for a range of consent applications impacting soils, wetlands and water quality and quantity. Responsible for the peer review of technical consent review assessments completed by the PDP water resources team. Preparation and presentation of evidence at resource consent hearings. Advice on groundwater management and groundwater investigations, including risks to community drinking water supplies.

Otago Regional Council, Technical Water Resources Advice (2015-present)
Peer Reviewer and Technical Lead

Technical lead for PDP's water resources advice for Otago Regional Council including groundwater management and groundwater investigations, assessment of risks to community drinking water supplies. Previous work has included undertaking and project managing technical reviews for a range of consent applications for groundwater takes, closed landfills, large and small scale wastewater discharge consents, stream diversions, gravel abstractions and others.

Ministry for the Environment, Technical Guidelines for Drinking Water Source Protection Zones and Delineating Source Water Risk Management Areas (2018-present)
Project manager/author

Hilary was the project manager and lead author of technical guidelines for the delineation of both groundwater and surface water drinking water source protection zones including specifications for a 'default' national approach. The report was commissioned as part of the Review of the National Environmental Standard for Sources of Human Drinking Water. Hilary was the lead author of the subsequent guidelines providing further detailed delineation information.

Greater Wellington Regional Council, Technical Water Resources Advice (2011-present)
Technical Expert

Preparation of spreadsheet analysis tools and guideline document on aquifer test analysis and technical advice on groundwater management in the region.

Horizons Regional Council, Technical Water Resources Advice (2012-present)
Technical Expert

Technical advisor for regional community supply protection zone delineation project for community supplies and allocation advice reports. Overview of audits of consent applications. Groundwater allocation workshop for Horizons Regional Council and other regional councils.

Christchurch City Council, Water Supplies (2005 – present)
Technical Expert

Assistance with the design of aquifer testing and preparation of groundwater assessments, including source protection zones, for wells drilled for new city supply pumping stations. Assessment of potential groundwater effects arising from landfills and stormwater discharges.

Selwyn District Council, Water Supplies and Wastewater Discharges (2011-present)
Technical Expert

Modelling potential groundwater quality impacts of on-site sewage treatment systems in Darfield and Kirwee and outlining future sewage treatment and disposal options and associated effects. Assessment of the potential effects of stormwater discharge from the townships of Rolleston, Hororata, Darfield, Kirwee, West Melton and Leeston on groundwater quality for global stormwater discharge consent applications. Assessment of effects for closed landfills and council's drainage network. Guidance on source water protection zones for new water supplies.

New Zealand Defence Force, Tekapo Military and Burnham Camps (2005-2011)
Technical Expert

Investigation of existing wastewater system at Tekapo Army base; preparation of report detailing options for system upgrade; resource consent application assistance; detailed design of Twin Aerated Lagoons; tender documents preparation; construction supervision. Assessment of the potential for interference effects from proposed groundwater abstractions on NZ army wells at Burnham.

Various Clients, Water Supplies (2004-present)
Technical Expert

Hydrological and hydrogeological investigations, advice on well/infiltration gallery siting, aquifer testing and analysis and preparation of AEE's for numerous water supply projects.



Carl Steffens

TECHNICAL DIRECTOR – WATER RESOURCES

Carl is a hydrogeologist with over 20 years experience working on and managing groundwater projects throughout NZ.

Qualifications

BSc Geological Sciences, 2001, University of Canterbury

PGDipSci (Engineering geology), 2004, University of Canterbury

Affiliations

Member of New Zealand Hydrological Society

Career Summary

2004 – Present

Technical Director – Water Resources, Pattle Delamore Partners Ltd, Christchurch

CORE EXPERTISE

- Groundwater resource evaluation and modelling
- Groundwater sampling and monitoring
- Hydrogeological field testing
- Construction dewatering
- Resource consent assessments and applications
- Preparation and presentation of evidence for hearings
- Project management

MANAGEMENT EXPERIENCE

- PDP Groundwater Services Leader
- Experienced Project Manager and Technical Lead

CAREER SUMMARY

Carl has broad experience in hydrogeological field testing, monitoring and sampling, data interpretation/analysis, analytical and numerical modelling and reporting. Carl has been involved in the preparation of Assessment of Environmental Effects (AEE) reports for consent applications and presenting evidence as an expert witness at hearings.

He has worked on a broad range of construction related groundwater projects including projects relating to construction dewatering, stormwater basins, wastewater systems, roading developments and subdivisions. He also has extensive experience on irrigation projects.

Carl has provided assistance to local councils including CCC on the development of groundwater drinking water supply sources including consenting requirements. He has also worked on projects for various regional councils throughout the country including ECan.

PROJECT EXPERIENCE

Aurecon

Technical assessment of construction dewatering rates and assessment of effects to support resource consent application for Parakiore Recreation and Sports Facility.

Brian Perry Civil

Construction dewatering advice relating to civil works across Cashmere Stream at Eastman Wetlands.

Christchurch City Council

Groundwater assessments, pump testing and preparation of resource consent applications for new Christchurch City Community Drinking-water Supply bores at various city pumping stations.

Christchurch City Council

Groundwater assessments and/or monitoring relating to proposed stormwater infiltration, retention and wetland sites including Milns Basin (Eastman Wetlands) Worsleys Basin and Quaifes Road.

Confidential Client

Hydrogeological investigations and numerical modelling of dewatering requirements and groundwater management issues associated with proposed open cast mine developments.

Danne Mora Holding Ltd

Development of a Modflow numerical groundwater flow model to assess potential drainage flows to permanently lower the water table at a proposed residential subdivision.

Environment Canterbury

Technical review of various resource consent applications for the taking, use and discharge of groundwater within Canterbury.

Fire and Emergency New Zealand

Assessment of effects relating to construction dewatering associated with site redevelopment at various fire station sites. Preparation of resource consent application to take, use and discharge groundwater for dewatering purposes.

Foodstuffs (South Island) Properties Limited

Assessment of dewatering impacts relating to proposed construction works at Foodstuffs Prestons Road site, Christchurch.

Fulton Hogan Limited

Field investigations including slug testing and stream gauging, data analysis, hydrogeological modelling and predictions of groundwater flows emerging from a groundwater drainage system installed beneath the roading network at Longhurst subdivision, Halswell.

Gillman Wheelans Limited

Field testing and assessments relating to new community groundwater supply bores, construction dewatering relating to service installation, dewatering induced settlement and associated resource consenting for various subdivision developments within Canterbury.

New Zealand Transport Agency

Preparation and presentation of evidence at a resource consent hearing relating to an application by NZTA to Waimakariri District Council for the alteration of a designation and the construction of a State Highway realignment and the widening of an existing State highway in relation to the Woodend Short Eastern Alignment.

Ngāi Tahu Property Limited

Hydrogeological assessments to support dewatering and excavation consent applications relating to a multistorey car park building in central Christchurch.

Prestons Road Limited

Quantifying groundwater inflows into proposed stormwater management basins and wetlands at a Christchurch residential development. Hydraulic onsite testing including piezo installation, trench excavation, pumping trials and slug testing. Data interpretation and analysis and estimates of groundwater inflows via analytical flow models.

Rae Paenga

Numerical modelling and review of contractor dewatering methodology at Parakiore Recreation and Sports Facility. Expert witness at arbitration hearing between Principle and Contractor.

University of Canterbury

Field testing, design and analysis of a large-scale groundwater dewatering system involving direct discharge of large dewatering flows to multiple re-injection bores for construction of the University biosciences building. Other specialist groundwater services for UC relating to construction dewatering and groundwater sourced air condition systems.

Various clients

Technical assessments and preparation of resource consent applications to take, use and discharge groundwater for heating and cooling purposes, including for cooling computer servers at data centres, at various sites withing Christchurch City.

Various clients

Supervision of field investigations including the drilling and installation of groundwater abstraction/monitoring bores. Groundwater quality sampling and groundwater level monitoring.

Various clients

Preparation of assessment of environmental effects (AEE) reports for groundwater take, use and discharge consent applications. Assessments of potential well yields, interpretation and analysis of pumping test data, well interference and groundwater mounding assessments associated with groundwater takes and discharges, interaction of surface water and groundwater, groundwater quality assessments, sea water intrusion assessments, design of groundwater level and quality monitoring programmes, analytical and numerical modelling applications.

West Coast Regional Council

Advising and technical reviews of resource consent applications to vary existing discharge resources consents held by Taylorville Resource Park Limited near Greymouth.



Alesha Watkins

Senior Environmental Scientist

Alesha is an environmental scientist with a Bachelor of Science in Earth Sciences from the University of Waikato. She has gained more than seven years' experience in environmental and compliance monitoring. Since joining Pattle Delamore Partners, Alesha has developed a strong focus on technical assessments for surface water take consenting and reliability assessments.

Qualifications

BSc (Tech) - Earth Sciences, University of Waikato, 2017

Affiliations

Member of New Zealand Hydrological Society (NZHS)

Training

Advanced Nitrogen in the Environment (Enviroknowledge®)

First Aid

Site Safe Foundation Passport

4WD Practical Safety Course

Career Summary

June 2025 – Present
Senior Environmental Scientist, Pattle Delamore Partners Ltd, Christchurch

September 2023 – June 2025
Environmental Scientist, Pattle Delamore Partners Ltd, Christchurch

January 2022 – September 2023
Compliance & Monitoring Lead, Rotorua Lakes Council, Rotorua

November 2018 – December 2021
Data & Consent Monitoring Technician, Rotorua Lakes Council, Rotorua

November 2016 – June 2017
Student Intern, Manaaki Whenua, Hamilton

EXPERTISE

- Technical peer review of consent applications
- Assessment of environmental effects
- Routine and investigative water quality monitoring
- Water Management Plans/Drought Management Plans
- Contaminant transport assessments
- Low-flow and reliability assessments
- Soil and land management
- Compliance monitoring
- Technical reporting

CAREER SUMMARY

Alesha has joined PDP as an environmental scientist with over five years' experience in the environmental field. Since beginning her career in Local Government, Alesha has gained operational knowledge of municipal 3 Waters services and infrastructure. She has experience undertaking water quality fieldwork, designing monitoring programmes, technical reporting on 3 Waters activities, and collaborating with stakeholders.

During her time at PDP, Alesha has been involved with preparation and technical reviews of resource consent applications, delineation of source water risk management areas, field monitoring programmes, and undertaking planning assessments against relevent legislation.

PROJECT EXPERIENCE

Silver Fern Farms, Groundwater Take Consent Review
Environmental Scientist, Project Manager

Carried out a source water reliability assessment to determine the impact of in-stream minimum flow restrictions on a hydraulically linked groundwater abstraction site. Determined storage capacity required to achieve 100% reliability. Analysed demand data across various water sources to propose interim alternate operational practices to reduce impact on in-stream flows. Investigated alternate groundwater sources and options to treat groundwater to meet the required standards. Coordinated inputs from disciplines across the company to produce a series of technical documents.

Selwyn District Council, Review of Rolleston and Prebbleton Public Supply Bore Source Protection Zone
Environmental Scientist

Undertook a review of groundwater quality data of bores serving the Rolleston and Prebbleton townships against the Drinking Water Standards to determine surface influence and appropriate protection zone requirements.

Fulton Hogan, Dewatering and Excavation Risk Assessment
Environmental Scientist

Hydrogeological assessment for trenching excavation in Spreydon, Christchurch. Reviewed borelog, CPT and groundwater-monitoring data to assess excavation, dewatering and artesian groundwater risks and developed practical controls for managing unexpected artesian inflows.

Hurunui District Council, Hurunui Rural Water Supply Reconsenting
Environmental Scientist, Project Manager

Prepared hydrological and ecological assessments of environmental effects to support an application to increase HDC's surface water take consent for a community and stock drinking water supply within an overallocated surface water catchment.
Developed a Water Supply Strategy (WSS) to support the consent application. The WSS outlined water conservation methods and measures to minimise losses in the reticulation network. Also included in the WSS was a Drought Management Plan which set out steps to reduce water demand, and therefore abstraction, at times when the river flow is at or below the Regional Plan minimum flow while still providing drinking water for domestic and stock needs.

Rotorua Lakes Council, Municipal Water Supplies Reconsenting (Rotoiti, Rotomā, Rotorua Central, Kaharoa/Hamurana)
Environmental Scientist, Project Manager

Project manager for reconsenting of two surface water takes within the Rotorua District (Rotoiti and Rotomā). Prepared hydrological and ecological assessments of environmental effects to increase the consented takes to meet future demand over 35-year terms. Developed Water Management Plans for each supply which outlined water conservation methods and measures to minimise losses in the reticulation network. Coordinated inputs from disciplines across the company to produce a series of technical documents. Prepared technical reports and planning assessments to support the applications for a large municipal supply (Rotorua Central) and a rural public water supply (Kaharoa/Hamurana).

Hurunui District Council, Hawarden and Cheviot WWTPs Reconsenting
Environmental Scientist

Desktop analysis of the potential environmental effects on groundwater and surface water associated with seepage from oxidation ponds and discharge of effluent to surface water. Analysis involved assessing available groundwater quality information, groundwater flow direction, aquifer characteristics such as hydraulic conductivity, and contaminant transport.

Hekeao Hinds Water Enhancement Trust, Reliability Assessment
Environmental Scientist

Constructed a synthetic flow record based on regression analyses undertaken on water courses in the Lower Hinds River area. Carried out a source water reliability assessment to determine the impact of in-stream minimum flow restrictions on the proposed water take across a range of dry and wet hydrological scenarios.

Daiken Southland, Surface Water Take Reconsenting
Environmental Scientist

Assessed current and future water demand requirements and the efficacy of water reduction methods implemented at the plant. Prepared a technical hydrological assessment of environmental effects to support the consent application. Produced material for iwi and stakeholder consultation.

Daiken New Zealand Limited, Groundwater Take Reconsenting
Environmental Scientist

Environmental scientist for an ongoing monitoring programme to inform the reconsenting of multiple activities at the Daiken NZL site. Assessed current and future water demand requirements. Conducted fieldwork to assess streambed conductance to assist with stream depletion assessments for two water supply bores.

Rotorua Lakes Council, Source Water Risk Management Plan
Environmental Scientist

Prepared a source water risk management plan for the Rotorua Central Water Supply Zone, which services a population of approximately 50,000 people. The plan was prepared in accordance with the Taumata Arowai Drinking Water Safety Planning guidance and included a risk register documenting identified catchment hazards, existing control measures, and residual risks following mitigation.

Appendix C: Borelogs

Borelog for well BX23/0144

Grid Reference (NZTM): 1548829 mE, 5170152 mN
Location Accuracy: 10 - 50m
Ground Level Altitude: 45.9 m +MSD Accuracy: < 2.5 m
Driller: McMillan Drilling Ltd
Drill Method: Rotary/Percussion
Borelog Depth: 88.0 m Drill Date: 07-Dec-2012

Environment Canterbury Regional Council
Kaunihera Taiao ki Waitaha

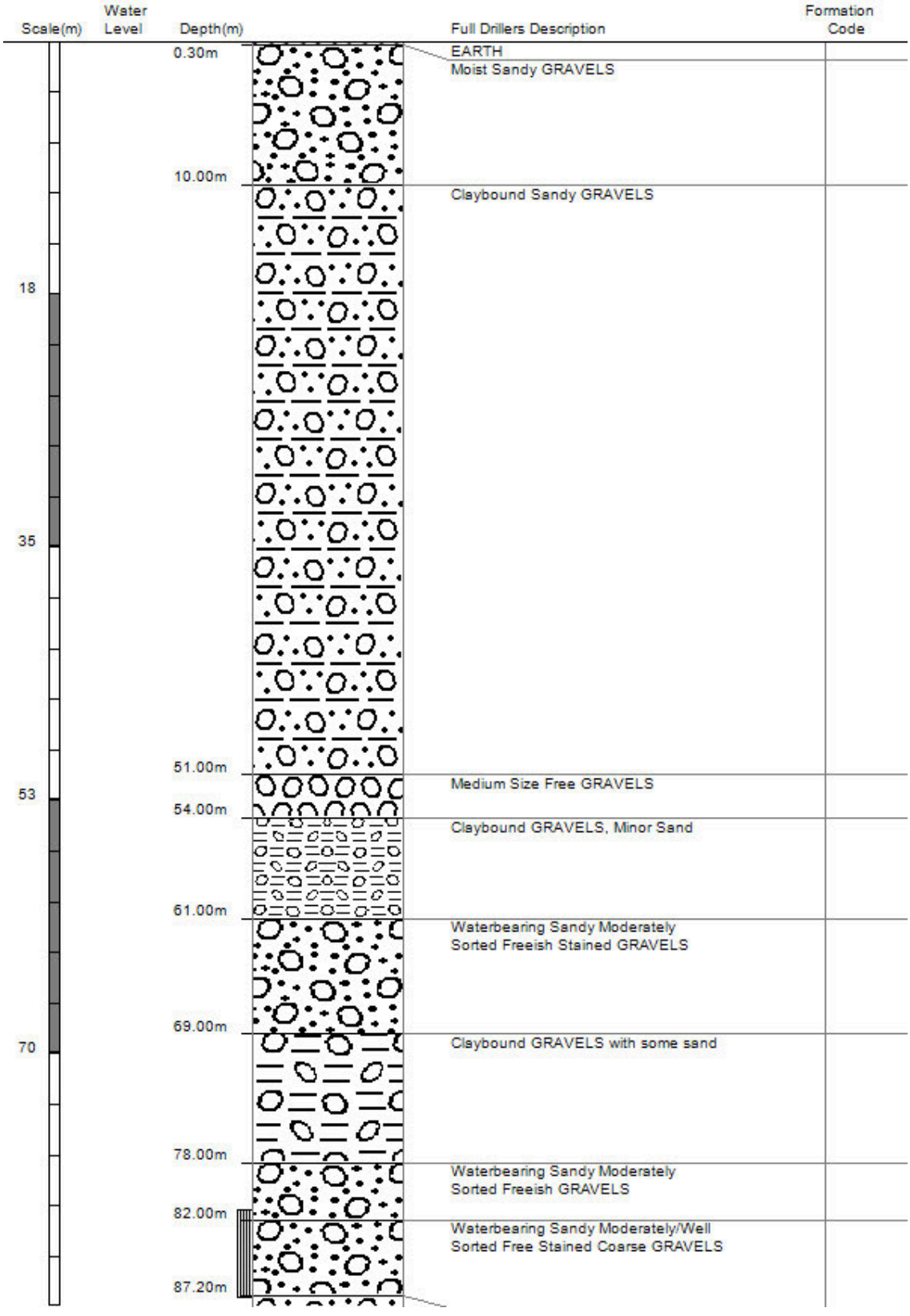

Borelog for well BX23/0895

Grid Reference (NZTM): 1549888 mE, 5168727 mN
Location Accuracy: 50 - 300m
Ground Level Altitude: 36.3 m +MSD Accuracy: < 2.5 m
Driller: Clemence Drilling Contractors
Drill Method: Rotary/Percussion
Borelog Depth: 53.3 m Drill Date: 16-Apr-2019

Environment Canterbury Regional Council
Kaunihera Taiao ki Waitaha

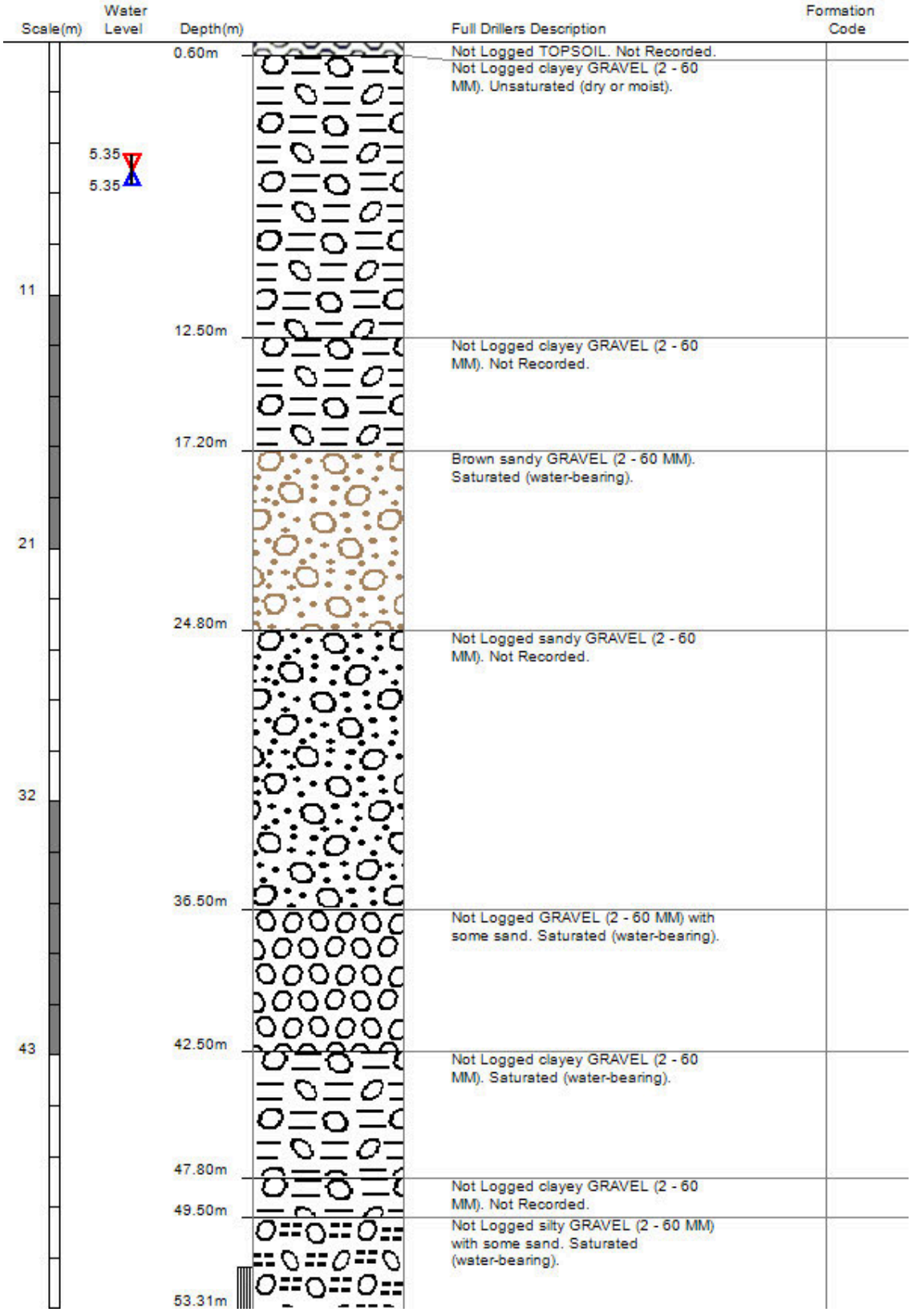

Borelog for well M36/7225

Grid Reference (NZTM): 1547716 mE, 5170325 mN
Location Accuracy: 2 - 15m
Ground Level Altitude: 50.2 m +MSD Accuracy: < 0.5 m
Driller: McMillan Drilling Ltd
Drill Method: Rotary/Percussion
Borelog Depth: 60.0 m Drill Date: 25-Sep-2002

Environment Canterbury Regional Council
Kaunihera Taiao ki Waitaha

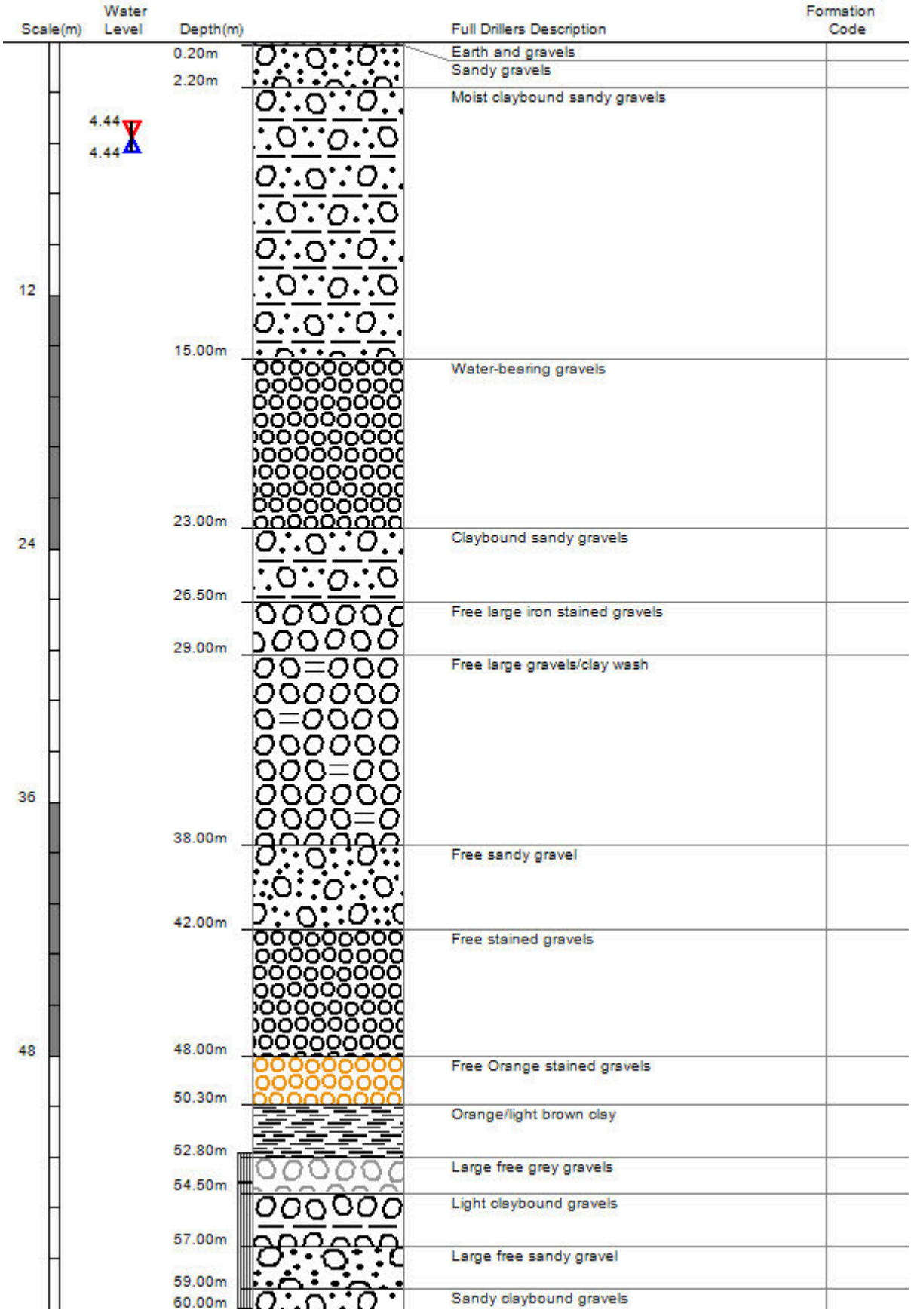

Borelog for well M36/8063

Grid Reference (NZTM): 1547469 mE, 5171189 mN
Location Accuracy: 10 - 50m
Ground Level Altitude: 54.7 m +MSD Accuracy: < 2.5 m
Driller: McMillan Drilling Ltd
Drill Method: Rotary/Percussion
Borelog Depth: 97.8 m Drill Date: 11-Jan-2013

Environment Canterbury Regional Council
Kaunihera Taiao ki Waitaha

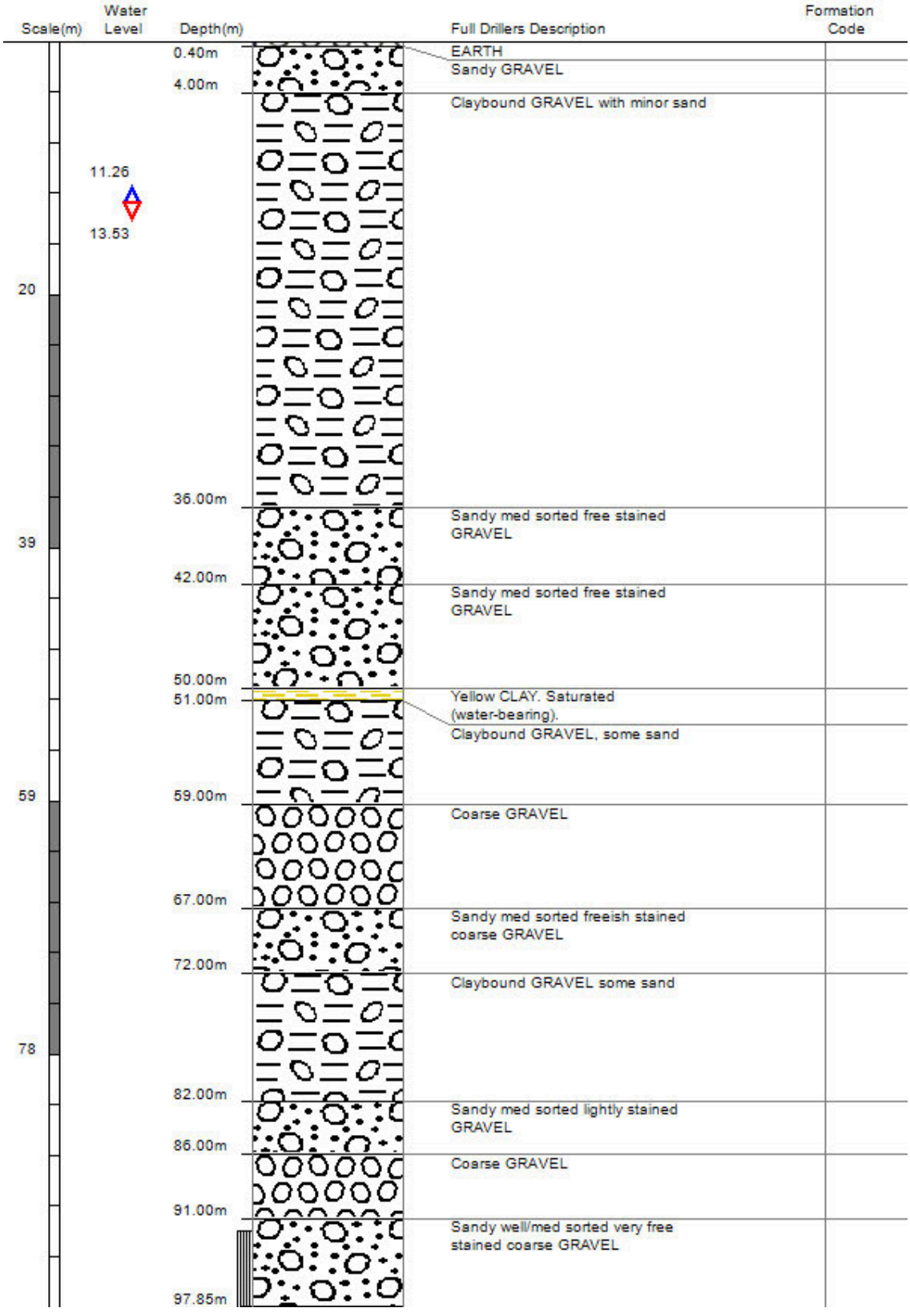

Appendix D: Schedule 12 Well Interference Assessment

Brookside - Trenching Dewatering

Input file used 202610220922737.prn
Model Parameters for drawdown calculations
Standard Screen Length :3m
Standard Pump Length :2m
Depth Range of pumped Aquifer taken from 0m till 50m
Transmissivity 1460 m2/d
Storativity 0.1

WellNo	Use	Owner	Depth	AdoptDepth	Top_Screen	CutOff	Calc80Min	Available	Protected	DD4Interference	CumDD	OkCumDD	VIR/0001_Distance	VIR/0001_DDA	VIR/0001_DD	VIR/0001_DDOk	VIR/0001_DominantPeriod	Comment1	Comment2	Q7	Q150
M36/5022	Irrigation	[redacted]	25.2	29	26	24	-9.55	14.45	11.56	2.89	0	ok	351.5921	0.397822	0.397822	ok	84		Default depth with standard screen	9.4	4.46
M36/2047	Irrigation	[redacted]	13.5	29	26	24	-9.26	14.74	11.792	2.948	0	ok	563.0781	0.282963	0.282963	ok	84		Default depth with standard screen	9.35	4.46
BX23/0993	Groundwater Quality	[redacted]	19.76	29	26	24	-11.78427386	12.21573	9.772581	2.443145	0	ok	661.0272	0.245171	0.245171	ok	84		Default depth with standard screen Calc80min interpolated	0	0
BX23/0208	Water Level Observation	[redacted]	17	29	26	24	-11.86370701	12.13629	9.709034	2.427259	0	ok	691.0347	0.234885	0.234885	ok	84	Nominal Flow used	Default depth with standard screen Calc80min interpolated	0.12	0.12
M36/4573	Irrigation	[redacted]	40.5	40.5	38.5	36.5	-11.75	24.75	19.8	4.95	0	ok	700	0.231915	0.231915	ok	84	Nominal Flow used		0.12	0.12
M36/5881	Irrigation	[redacted]	29	29	22	20	-8.56	11.44	9.152	2.288	0	ok	764.2316	0.211899	0.211899	ok	84	Depth 2nd screen i.s.o. slotted 1st screen.		4.9	4.9
M36/4270	Domestic and Stockwater	[redacted]	20.4	29	26	24	-8.68	15.32	12.256	3.064	0.125638	ok	873.3871	0.182278	0.307916	ok	84	Nominal Flow used	Default depth with standard screen	0.12	0.12
M36/5023	Irrigation	[redacted]	24	29	26	24	-8.75	15.25	12.2	3.05	0	ok	887.3269	0.178839	0.178839	ok	84		Default depth with standard screen	9.35	4.46
M36/0015	Domestic and Stockwater	[redacted]	36.3	36.3	27.4	25.4	-11.52	13.88	11.104	2.776	0	ok	948.873	0.164477	0.164477	ok	84	Nominal Flow used		0.12	0.12
M36/3946	Domestic and Stockwater	[redacted]	24.4	29	26	24	-12.13	11.87	9.496	2.374	0	ok	952.6069	0.163646	0.163646	ok	84	Nominal Flow used	Default depth with standard screen	0.12	0.12
M36/0027	Irrigation	[redacted]	36.3	36.3	30.2	28.2	-12.31	15.89	12.712	3.178	0	ok	971.7556	0.159455	0.159455	ok	84			0	0
M36/20415	Water Level Observation	[redacted]	16.12	29	26	24	-10.05	13.95	11.16	2.79	0	ok	976.3626	0.158464	0.158464	ok	84	Nominal Flow used	Default depth with standard screen	0.12	0.12
M36/7464	Water Level Observation	[redacted]	16.5	29	26	24	-9.62	14.38	11.504	2.876	0.108956	ok	1052.559	0.142969	0.251925	ok	84	Nominal Flow used	Default depth with standard screen	0.12	0.12
BX23/0994	Groundwater Quality	[redacted]	16.72	29	26	24	-11.44002275	12.55998	10.04798	2.511995	0.115147	ok	1107.079	0.132843	0.24799	ok	84		Default depth with standard screen Calc80min interpolated	0	0
M36/20416	Water Level Observation	[redacted]	16.2	29	26	24	-9.87	14.13	11.304	2.826	0	ok	1158.24	0.123997	0.123997	ok	84	Nominal Flow used	Default depth with standard screen	0.12	0.12
M36/5045	Domestic Supply	[redacted]	33	33	31	29	-10.32	18.68	14.944	3.736	0	ok	1165.238	0.122834	0.122834	ok	84	Nominal Flow used		0.12	0.12
M36/5044	Domestic Supply	[redacted]	34.4	34.4	32.4	30.4	-10.02	20.38	16.304	4.076	0	ok	1169.213	0.122178	0.122178	ok	84	Nominal Flow used		0.12	0.12
M36/5047	Domestic Supply	[redacted]	33.3	33.3	31.3	29.3	-10.96	18.34	14.672	3.668	0	ok	1188.453	0.119051	0.119051	ok	84	Nominal Flow used		0.12	0.12
M36/4921	Domestic and Stockwater	[redacted]	40	40	37	35	-11.21	23.79	19.032	4.758	0	ok	1199.817	0.117242	0.117242	ok	84	Nominal Flow used	No Screen Info	0.12	0.12
BX23/0207	Water Level Observation	[redacted]	14	29	26	24	-11.51037673	12.48962	9.991699	2.497925	0.105741	ok	1206.161	0.116243	0.221985	ok	84	Nominal Flow used	Default depth with standard screen Calc80min interpolated	0.12	0.12
M36/0064	Domestic and Stockwater	[redacted]	24.4	29	26	24	-12.63	11.37	9.096	2.274	0	ok	1224.239	0.113444	0.113444	ok	84	Nominal Flow used	Default depth with standard screen	0.12	0.12
M36/0465	Water Level Observation	[redacted]	30.5	30.5	27.5	25.5	-8.52	16.98	13.584	3.396	0.319104	ok	1234.294	0.111915	0.431019	ok	84	Nominal Flow used	No Screen Info	0.12	0.12
M36/2868	Domestic Supply	[redacted]	30	30	29.4	27.4	-12.55	14.85	11.88	2.97	0	ok	1234.326	0.11191	0.11191	ok	84	Nominal Flow used		0.12	0.12
M36/5040	Domestic Supply	[redacted]	34.5	34.5	32.5	30.5	-9.61	20.89	16.712	4.178	0	ok	1240.016	0.111054	0.111054	ok	84	Nominal Flow used		0.12	0.12
M36/5043	Domestic Supply	[redacted]	35.3	35.3	33.3	31.3	-9.8	21.5	17.2	4.3	0	ok	1302.713	0.102031	0.102031	ok	84	Nominal Flow used		0.12	0.12
M36/7463	Water Level Observation	[redacted]	13.2	29	26	24	-9.79	14.21	11.368	2.842	0	ok	1304.019	0.101851	0.101851	ok	84	Nominal Flow used	Default depth with standard screen	0.12	0.12

Skellerup South - Pump Station Dewatering

Input file used 202610220859793.prn
Model Parameters for drawdown calculations
Standard Screen Length :3m
Standard Pump Length :2m
Depth Range of pumped Aquifer taken from 0m till 50m
Transmissivity 1460 m2/d
Storativity 0.1

WellNo	Use	Owner	Depth	AdoptDepth	Top_Screen	CutOff	Calc80Min	Available	Protected	DD4Interference	CumDD	OkCum DD	VIR/0001_ Distance	VIR/0001_ DDA	VIR/0001_ DD	VIR/0001_ DDOk	VIR/0001_ Dominant Period	Comment1	Comment2	Q7	Q150
M36/0047	Irrigation		14	29	26	24	-4.42	19.58	15.664	3.916	0.145	ok	237.41	0.70	0.84	ok	84	WL Observation Bore.	Default depth with standard screen	18.84	6.6
BX23/0735	Irrigation		48	48	41.32	39.32	-7.999471	31.32053	25.05642	6.26410573	0.440	ok	315.79	0.60	1.04	ok	84		Calc80min interpolated	0	0
M36/0052	Domestic Supply		10.5	29	26	24	-8.1	15.9	12.72	3.18	0.414	ok	325.52	0.59	1.00	ok	84	Nominal Flow used	Default depth with standard screen	0.12	0.12
M36/0214	Irrigation		13.85	29	26	24	-7.7	16.3	13.04	3.26	0.265	ok	368.42	0.54	0.81	ok	84		Default depth with standard screen	0	0
M36/7584	Domestic Supply		23	29	26	24	-7.84	16.16	12.928	3.232	0.284	ok	465.11	0.46	0.75	ok	84	Nominal Flow used	Default depth with standard screen	0.12	0.12
M36/4387	Domestic Supply		35.6	35.6	32.6	30.6	-8.87	21.73	17.384	4.346	0.000	ok	505.93	0.43	0.43	ok	84	Nominal Flow used		0.12	0.12
M36/0455	Domestic Supply		9	29	26	24	-6.43	17.57	14.056	3.514	0.223	ok	506.42	0.43	0.66	ok	84	Nominal Flow used	Default depth with standard screen	0.12	0.12
M36/7416	Irrigation		46.9	46.9	44.9	42.9	-8.29	34.61	27.688	6.922	0.000	ok	517.48	0.43	0.43	ok	84			4	4
M36/3626	Dairy Use		7.6	29	26	24	-7.42	16.58	13.264	3.316	0.613	ok	568.12	0.40	1.01	ok	84		Default depth with standard screen	0	0
M36/0368	Dairy Use		5.5	29	26	24	-7.39	16.61	13.288	3.322	0.462	ok	631.00	0.36	0.82	ok	84		Default depth with standard screen	0	0
M36/4220	Irrigation		21.3	29	26	24	-8.81	15.19	12.152	3.038	0.000	ok	702.17	0.33	0.33	ok	84		Default depth with standard screen	1.11	1.11
BX23/1895	Water Level Observation		29.54	29.54	5.54	3.54	-8.969654	-5.42965	-4.34372	-1.08593072	0.000	Screen>	752.08	0.30	0.30	Exceeded	84	Nominal Flow used	Calc80min interpolated	0.12	0.12
M36/0357	Irrigation		7.6	29	26	24	-7.1	16.9	13.52	3.38	0.344	ok	804.03	0.28	0.63	ok	84		Default depth with standard screen	24.31	18.73
M36/7663	Irrigation		30	30	27	25	-8.04	16.96	13.568	3.392	0.000	ok	818.05	0.28	0.28	ok	84	Nominal Flow used		0.12	0.12
BX23/0854	Domestic and Stockwater		30	30	28.31	26.31	-7.913227	18.39677	14.71742	3.679354572	0.235	ok	858.98	0.26	0.50	ok	84	Nominal Flow used	Calc80min interpolated	0.12	0.12
M36/20535	Domestic and Stockwater		30	30	27	25	-9.12	15.88	12.704	3.176	0.000	ok	873.96	0.26	0.26	ok	84	Nominal Flow used	No Screen Info	0.12	0.12
M36/4221	Irrigation		21.44	29	26	24	-9.07	14.93	11.944	2.986	0.000	ok	917.15	0.24	0.24	ok	84		Default depth with standard screen	2.14	1.25
BX23/1766	Water Level Observation		29.01	29.01	5.56	3.56	-9.170004	-5.61	-4.488	-1.122000873	0.000	Screen>	918.87	0.24	0.24	Exceeded	84	Nominal Flow used	Calc80min interpolated	0.12	0.12
M36/4451	Domestic Supply		0	29	26	24	-9.26419	14.73581	11.78865	2.947162056	0.000	ok	929.81	0.24	0.24	ok	84	Nominal Flow used	Default depth with standard screen Calc80min interpolated	0.12	0.12
M36/2467	Domestic Supply		6	29	26	24	-7.04	16.96	13.568	3.392	0.807	ok	943.17	0.23	1.04	ok	84	Nominal Flow used	Default depth with standard screen	0.12	0.12
M36/4449	Irrigation		24.2	29	26	24	-9.27	14.73	11.784	2.946	0.000	ok	948.00	0.23	0.23	ok	84		Default depth with standard screen	0	0
M36/3885	Dairy Use		18	29	26	24	-7.13	16.87	13.496	3.374	0.348	ok	966.31	0.23	0.57	ok	84		Default depth with standard screen	0	0
M36/2645	Dairy Use		6.8	29	26	24	-6.92	17.08	13.664	3.416	0.876	ok	1012.80	0.21	1.09	ok	84	Nominal Flow used	Default depth with standard screen	0.12	0.12
M36/0607	Irrigation		10	29	26	24	-3.11	20.89	16.712	4.178	0.909	ok	1048.12	0.20	1.11	ok	84		Default depth with standard screen	0	0
M36/0109			14.9	29	26	24	-7.6	16.4	13.12	3.28	0.184	ok	1062.13	0.20	0.38	ok	84		Default depth with standard screen	0	0
M36/5254	Irrigation		36	36	34	32	-8.99	23.01	18.408	4.602	0.000	ok	1087.48	0.19	0.19	ok	84			0	0
M36/4067	Domestic Supply		8.27	29	26	24	-7.66	16.34	13.072	3.268	0.187	ok	1087.60	0.19	0.38	ok	84	Nominal Flow used	Default depth with standard screen	0.12	0.12
M36/4450	Irrigation		25.2	29	26	24	-9.43	14.57	11.656	2.914	0.000	ok	1144.10	0.18	0.18	ok	84		Default depth with standard screen	4.5	3.71
M36/3625	Domestic and Stockwater		6	29	26	24	-6.66	17.34	13.872	3.468	0.791	ok	1148.90	0.18	0.97	ok	84	Nominal Flow used	Default depth with standard screen	0.12	0.12
M36/4069	Irrigation		20.5	29	26	24	-7.68	16.32	13.056	3.264	0.211	ok	1150.18	0.18	0.39	ok	84	Nominal Flow used	Default depth with standard screen	0.12	0.12
M36/7512	Domestic and Stockwater		29	29	27	25	-9.32	15.68	12.544	3.136	0.000	ok	1166.47	0.17	0.17	ok	84	Nominal Flow used		0.12	0.12
M36/7902	Domestic and Stockwater		36	36	34.5	32.5	-8.9	23.6	18.88	4.72	0.000	ok	1171.67	0.17	0.17	ok	84	Nominal Flow used		0.12	0.12
M36/5023	Irrigation		24	29	26	24	-8.75	15.25	12.2	3.05	0.000	ok	1199.63	0.17	0.17	ok	84		Default depth with standard screen	9.35	4.46
M36/3163	Domestic and Stockwater		15.9	29	26	24	-6.44	17.56	14.048	3.512	0.940	ok	1294.98	0.15	1.08	ok	84	Nominal Flow used	Default depth with standard screen	0.12	0.12
M36/4270	Domestic and Stockwater		20.4	29	26	24	-8.68	15.32	12.256	3.064	0.126	ok	1313.53	0.14	0.27	ok	84	Nominal Flow used	Default depth with standard screen	0.12	0.12
M36/4121	Domestic and Stockwater		21.5	29	26	24	-9.36	14.64	11.712	2.928	0.000	ok	1315.22	0.14	0.14	ok	84	Nominal Flow used	Default depth with standard screen	0.12	0.12
M36/5038	Domestic Supply		32.1	32.1	30.1	28.1	-9.58	18.52	14.816	3.704	0.000	ok	1337.58	0.14	0.14	ok	84	Nominal Flow used		0.12	0.12
M36/7639	Domestic and Stockwater		32	32	29	27	-9.27	17.73	14.184	3.546	0.000	ok	1358.22	0.13	0.13	ok	84	Nominal Flow used		0.12	0.12
M36/7173	Domestic and Stockwater		10	29	26	24	-6.39	17.61	14.088	3.522	0.569	ok	1378.77	0.13	0.70	ok	84	Nominal Flow used	Default depth with standard screen	0.12	0.12
M36/5881	Irrigation		29	29	22	20	-8.56	11.44	9.152	2.288	0.000	ok	1386.87	0.13	0.13	ok	84	Depth 2nd screen i.s.o. slotted 1st screen.		4.9	4.9
M36/4125	Irrigation		27	29	26	24	-7.14	16.86	13.488	3.372	0.220	ok	1405.19	0.12	0.35	ok	84	Has non-concurrent cond	Default depth with standard screen	22	12.4
M36/5040	Domestic Supply		34.5	34.5	32.5	30.5	-9.61	20.89	16.712	4.178	0.000	ok	1409.14	0.12	0.12	ok	84	Nominal Flow used		0.12	0.12
M36/0372	Irrigation		12.8	29	26	24	-6.95	17.05	13.64	3.41	0.366	ok	1416.54	0.12	0.49	ok	84		Default depth with standard screen	0	0
M36/4090	Irrigation		18.3	29	26	24	-8.44	15.56	12.448	3.112	0.000	ok	1419.44	0.12	0.12	ok	84	Nominal Flow used	Default depth with standard screen	0.12	0.12
M36/3509	Stock Supply		9.8	29	26	24	-7.34	16.66	13.328	3.332	0.683	ok	1434.91	0.12	0.80	ok	84	Nominal Flow used	Default depth with standard screen	0.12	0.12
M36/3621	Irrigation		8.5	29	26	24	-6.39	17.61	14.088	3.522	1.172	ok	1437.00	0.12	1.29	ok	84		Default depth with standard screen	0	0
M36/4346	Domestic Supply		26.8	29	26	24	-9.71	14.29	11.432	2.858	0.000	ok	1453.07	0.12	0.12	ok	84	Nominal Flow used	Default depth with standard screen	0.12	0.12
M36/7648	Domestic and Stockwater		26	29	26	24	-9.57	14.43	11.544	2.886	0.000	ok	1457.01	0.12	0.12	ok	84	Nominal Flow used	Default depth with standard screen	0.12	0.12
M36/5041	Domestic Supply		32	32	30	28	-9.73	18.27	14.616	3.654	0.000	ok	1468.00	0.11	0.11	ok	84	Nominal Flow used		0.12	0.12
M36/2047	Irrigation		13.5	29	26	24	-9.26	14.74	11.792	2.948	0.000	ok	1488.78	0.11	0.11	ok	84		Default depth with standard screen	9.35	4.46
M36/0453	Stock Supply		15.2	29	26	24	-5.53	18.47	14.776	3.694	0.367	ok	1515.60	0.11	0.47	ok	84	Nominal Flow used	Default depth with standard screen	0.12	0.12
M36/0608	Irrigation		7.3	29	26	24	-6.12	17.88	14.304	3.576	0.673	ok	1531.48	0.11	0.78	ok	84		Default depth with standard screen	30.99	25.66
M36/3684	Irrigation		19	29	26	24	-8.81	15.19	12.152	3.038	0.000	ok	1543.17	0.10	0.10	ok	84	Nominal Flow used	Default depth with standard screen	0.12	0.12
M36/0462	Domestic Supply		18.3	29	26	24	-6.92	17.08	13.664	3.416	0.400	ok	1545.21	0.10	0.50	ok	84	Nominal Flow used	Default depth with standard screen	0.12	0.12
M36/5043	Domestic Supply		35.3	35.3	33.3	31.3	-9.8	21.5	17.2	4.3	0.000	ok	1546.97	0.10	0.10	ok	84	Nominal Flow used		0.12	0.12
M36/4340	Domestic and Stockwater		30.3	30.3	28.3	26.3	-7.91	18.39	14.712	3.678	0.159	ok	1553.46	0.10	0.26	ok	84			4.22	4.22
M36/3477	Stock Supply		9.9	29	26	24	-8.15	15.85	12.68	3.17	0.329	ok	1564.18	0.10	0.43	ok	84	Nominal Flow used	Default depth with standard screen	0.12	0.12

Skellerup South - Trenching Dewatering

Input file used 202610220927864.prn
Model Parameters for drawdown calculations
Standard Screen Length :3m
Standard Pump Length :2m
Depth Range of pumped Aquifer taken from 0m till 50m
Transmissivity 1460 m2/d
Storativity 0.1

WellNo	Use	Owner	Depth	AdoptDepth	Top_Screen	CutOff	Calc80Min	Available	Protected	DD4Interference	CumDD	OkCumDD	VIR/0001_Distance	VIR/0001_DDA	VIR/0001_DD	VIR/0001_DDOk	VIR/0001_Dominant Period	Comment1	Comment2	Q7	Q150
M36/4387	Domestic Supply		35.6	35.6	32.6	30.6	-8.87	21.73	17.384	4.346	0	ok	182.28	0.562554	0.56255	ok	84	Nominal Flow used		0.12	0.12
BX23/1895	Water Level Observation		29.54	29.54	5.54	3.54	-9.076245	-5.536245	-4.428996	-1.107249	0	Screen>>	353.7937	0.396274	0.39627	Exceeded	84	Nominal Flow used	Calc80min interpolated	0.12	0.12
M36/4451	Domestic Supply		0	29	26	24	-9.350019	14.649981	11.719985	2.9299962	0	ok	372.4044	0.383583	0.38358	ok	84	Nominal Flow used	Default depth with standard screen Calc80min interpolated	0.12	0.12
BX23/1766	Water Level Observation		29.01	29.01	5.56	3.56	-9.259845	-5.699845	-4.559876	-1.139969	0	Screen>>	379.4443	0.378955	0.37896	Exceeded	84	Nominal Flow used	Calc80min interpolated	0.12	0.12
M36/4449	Irrigation		24.2	29	26	24	-9.27	14.73	11.784	2.946	0	ok	379.796	0.378727	0.37873	ok	84		Default depth with standard screen	0	0
M36/20535	Domestic and Stockwater		30	30	27	25	-9.12	15.88	12.704	3.176	0	ok	483.1283	0.319797	0.3198	ok	84	Nominal Flow used	No Screen Info	0.12	0.12
M36/7416	Irrigation		46.9	46.9	44.9	42.9	-8.29	34.61	27.688	6.922	0	ok	585.9693	0.273489	0.27349	ok	84			4	4
M36/4450	Irrigation		25.2	29	26	24	-9.43	14.57	11.656	2.914	0	ok	590.8003	0.271543	0.27154	ok	84		Default depth with standard screen	4.5	3.71
M36/4220	Irrigation		21.3	29	26	24	-8.81	15.19	12.152	3.038	0	ok	606.2953	0.265423	0.26542	ok	84		Default depth with standard screen	1.11	1.11
M36/4221	Irrigation		21.44	29	26	24	-9.07	14.93	11.944	2.986	0	ok	610.2622	0.263886	0.26389	ok	84		Default depth with standard screen	2.14	1.25
M36/0214	Irrigation		13.85	29	26	24	-7.7	16.3	13.04	3.26	0.2646944	ok	727.3679	0.223124	0.48782	ok	84		Default depth with standard screen	0	0
M36/0047	Irrigation		14	29	26	24	-4.42	19.58	15.664	3.916	0.145429	ok	743.8548	0.21802	0.36345	ok	84	WL Observation Bore.	Default depth with standard screen	18.84	6.6
M36/7512	Domestic and Stockwater		29	29	27	25	-9.32	15.68	12.544	3.136	0	ok	762.0584	0.212542	0.21254	ok	84	Nominal Flow used		0.12	0.12
BX23/0735	Irrigation		48	48	41.32	39.32	-8.100329	31.219671	24.975737	6.2439341	0.4400615	ok	781.4973	0.206869	0.64693	ok	84		Calc80min interpolated	0	0
M36/0052	Domestic Supply		10.5	29	26	24	-8.1	15.9	12.72	3.18	0.4138995	ok	782.6366	0.206542	0.62044	ok	84	Nominal Flow used	Default depth with standard screen	0.12	0.12
M36/5038	Domestic Supply		32.1	32.1	30.1	28.1	-9.58	18.52	14.816	3.704	0	ok	796.3573	0.20265	0.20265	ok	84	Nominal Flow used		0.12	0.12
M36/7902	Domestic and Stockwater		36	36	34.5	32.5	-8.9	23.6	18.88	4.72	0	ok	871.3742	0.18278	0.18278	ok	84	Nominal Flow used		0.12	0.12
M36/5040	Domestic Supply		34.5	34.5	32.5	30.5	-9.61	20.89	16.712	4.178	0	ok	885.5535	0.179273	0.17927	ok	84	Nominal Flow used		0.12	0.12
M36/0455	Domestic Supply		9	29	26	24	-6.43	17.57	14.056	3.514	0.2234634	ok	895.2229	0.176923	0.40039	ok	84	Nominal Flow used	Default depth with standard screen	0.12	0.12
M36/5041	Domestic Supply		32	32	30	28	-9.73	18.27	14.616	3.654	0	ok	898.2305	0.176199	0.1762	ok	84	Nominal Flow used		0.12	0.12
M36/4346	Domestic Supply		26.8	29	26	24	-9.71	14.29	11.432	2.858	0	ok	906.5418	0.174215	0.17422	ok	84	Nominal Flow used	Default depth with standard screen	0.12	0.12
M36/5254	Irrigation		36	36	34	32	-8.99	23.01	18.408	4.602	0	ok	915.1027	0.172197	0.1722	ok	84			0	0
M36/7584	Domestic Supply		23	29	26	24	-7.84	16.16	12.928	3.232	0.2841974	ok	943.6313	0.16565	0.44985	ok	84	Nominal Flow used	Default depth with standard screen	0.12	0.12
M36/4121	Domestic and Stockwater		21.5	29	26	24	-9.36	14.64	11.712	2.928	0	ok	952.8132	0.1636	0.1636	ok	84	Nominal Flow used	Default depth with standard screen	0.12	0.12
M36/5043	Domestic Supply		35.3	35.3	33.3	31.3	-9.8	21.5	17.2	4.3	0	ok	1008.229	0.151782	0.15178	ok	84	Nominal Flow used		0.12	0.12
M36/7648	Domestic and Stockwater		26	29	26	24	-9.57	14.43	11.544	2.886	0	ok	1016.729	0.15005	0.15005	ok	84	Nominal Flow used	Default depth with standard screen	0.12	0.12
M36/7663	Irrigation		30	30	27	25	-8.04	16.96	13.568	3.392	0	ok	1032.376	0.146914	0.14691	ok	84	Nominal Flow used		0.12	0.12
M36/4891	Domestic and Stockwater		25.25	29	26	24	-9.81	14.19	11.352	2.838	0	ok	1067.529	0.140113	0.14011	ok	84		Default depth with standard screen	0	0
M36/7639	Domestic and Stockwater		32	32	29	27	-9.27	17.73	14.184	3.546	0	ok	1069.81	0.139683	0.13968	ok	84	Nominal Flow used		0.12	0.12
M36/5042	Domestic Supply		32.1	32.1	30.1	28.1	-9.97	18.13	14.504	3.626	0	ok	1111.029	0.132138	0.13214	ok	84	Nominal Flow used		0.12	0.12
M36/3626	Dairy Use		7.6	29	26	24	-7.42	16.58	13.264	3.316	0.6128806	ok	1112.708	0.131839	0.74472	ok	84		Default depth with standard screen	0	0
M36/5044	Domestic Supply		34.4	34.4	32.4	30.4	-10.02	20.38	16.304	4.076	0	ok	1113.564	0.131688	0.13169	ok	84	Nominal Flow used		0.12	0.12
M36/5023	Irrigation		24	29	26	24	-8.75	15.25	12.2	3.05	0	ok	1140.151	0.127056	0.12706	ok	84		Default depth with standard screen	9.35	4.46
M36/0038	Domestic Supply		27.1	29	26	24	-9.96	14.04	11.232	2.808	0	ok	1152.397	0.124977	0.12498	ok	84	Nominal Flow used	Default depth with standard screen	0.12	0.12
M36/4280	Irrigation		25	29	26	24	-9.61	14.39	11.512	2.878	0	ok	1165.941	0.122718	0.12272	ok	84	Nominal Flow used	Default depth with standard screen	0.12	0.12
M36/0109		0	14.9	29	26	24	-7.6	16.4	13.12	3.28	0.1838771	ok	1187.674	0.119176	0.30305	ok	84		Default depth with standard screen	0	0
M36/20602	Domestic and Stockwater		36	36	34.5	32.5	-9.67	22.83	18.264	4.566	0	ok	1190.164	0.118777	0.11878	ok	84	Nominal Flow used		0.12	0.12
M36/4090	Irrigation		18.3	29	26	24	-8.44	15.56	12.448	3.112	0	ok	1198.822	0.117399	0.1174	ok	84	Nominal Flow used	Default depth with standard screen	0.12	0.12
M36/0368	Dairy Use		5.5	29	26	24	-7.39	16.61	13.288	3.322	0.461979	ok	1202.88	0.116759	0.57874	ok	84		Default depth with standard screen	0	0
M36/3684	Irrigation		19	29	26	24	-8.81	15.19	12.152	3.038	0	ok	1219.759	0.114131	0.11413	ok	84	Nominal Flow used	Default depth with standard screen	0.12	0.12
M36/5268	Domestic Supply		37	37	35	33	-8.25	24.75	19.8	4.95	0	ok	1239.814	0.111084	0.11108	ok	84	Nominal Flow used		0.12	0.12
M36/7543	Domestic and Stockwater		26	29	26	24	-9.66	14.34	11.472	2.868	0	ok	1251.854	0.109293	0.10929	ok	84	Nominal Flow used	Default depth with standard screen	0.12	0.12
M36/5045	Domestic Supply		33	33	31	29	-10.32	18.68	14.944	3.736	0	ok	1252.296	0.109228	0.10923	ok	84	Nominal Flow used		0.12	0.12
M36/4270	Domestic and Stockwater		20.4	29	26	24	-8.68	15.32	12.256	3.064	0.1256382	ok	1292.757	0.103415	0.22905	ok	84	Nominal Flow used	Default depth with standard screen	0.12	0.12
M36/3721	Domestic Supply		19	29	26	24	-9.85	14.15	11.32	2.83	0	ok	1293.112	0.103365	0.10337	ok	84	Nominal Flow used	Default depth with standard screen	0.12	0.12
BX23/0854	Domestic and Stockwater		30	30	28.31	26.31	-8.096287	18.213713	14.570971	3.6427427	0.2347238	ok	1298.033	0.102679	0.3374	ok	84	Nominal Flow used	Calc80min interpolated	0.12	0.12
M36/4291	Domestic Supply		36.6	36.6	34.5	32.5	-10.11	22.39	17.912	4.478	0	ok	1299.915	0.102418	0.10242	ok	84	Nominal Flow used		0.12	0.12
M36/3041	Domestic Supply		24	29	26	24	-10.1	13.9	11.12	2.78	0	ok	1310.503	0.10096	0.10096	ok	84	Nominal Flow used	Default depth with standard screen	0.12	0.12